STANDARD FILTRATION
HOUSING KITS & ACCESSORIES

BOSHART INDUSTRIES

Table of Contents



Filter Selection
Introduction Page
Pages 1 to 3

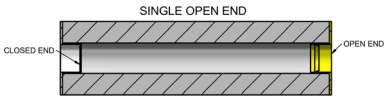

Filter Cartridges
Introduction Page
Pages 4 & 5

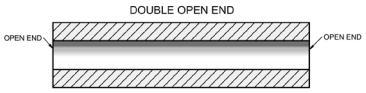



Pleated Polyester Filter Cartridges
14-(G)PPE
Pages 6 & 7





Spun Polypropylene Filter Cartridges
14-(G)SP
Pages 8 & 9





String Wound Polypropylene Filter Cartridges
14-(G)SWP
Pages 10 & 11



BOSHART INDUSTRIES

25 Whaley Avenue, PO Box 310
Milverton, ON CANADA N0K 1M0
Tel: 800-561-3164
VISIT US ONLINE AT BOSHART.COM

For more information on installation, adjustment, repair & operation, visit Boshart Knowledge Base at
SUPPORT.BOSHART.COM

© 2026 Boshart Industries Inc. All Rights Reserved.

Table of Contents Cont.



String Wound Bleached Cotton Filter Cartridges
14-(G)SWBC
Pages 12 & 13





String Wound Natural Cotton Filter Cartridges
14-SWNC
Pages 14 & 15



Carbon Block Filter Cartridges
14-(G)CB
Pages 16 & 17

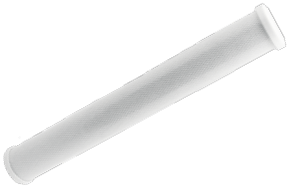



Carbon Briquette “Cyst Removal” Filter Cartridges
14-(G)CCR
Pages 18 & 19





Granular Activated Carbon Filter Cartridges
14-(G)GAC
Pages 20 & 21

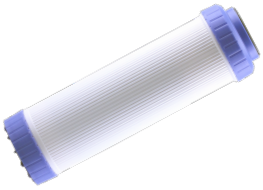

25 Whaley Avenue, PO Box 310
Milverton, ON CANADA N0K 1M0
Tel: 800-561-3164
VISIT US ONLINE AT BOSHART.COM

For more information on installation, adjustment, repair & operation, visit Boshart Knowledge Base at
SUPPORT.BOSHART.COM

© 2026 Boshart Industries Inc. All Rights Reserved.

Table of Contents Cont.



Powder Activated Carbon Wrap Filter Cartridges
14-(G)CW
Pages 22 & 23





Ice Maker/ In-Line Taste and Odour
14-IM
Page 24





Standard Filter Housing
14FHK-S
Pages 25 to 28





Slim Filter Housing
14FHK-SL
Pages 29 to 32





Giant Filter Housing
14FHK-G
Pages 33 to 36



25 Whaley Avenue, PO Box 310
Milverton, ON CANADA N0K 1M0
Tel: 800-561-3164

VISIT US ONLINE AT BOSHART.COM

For more information on installation, adjustment, repair & operation, visit Boshart Knowledge Base at
SUPPORT.BOSHART.COM

© 2026 Boshart Industries Inc. All Rights Reserved.

Table of Contents Cont.



Red High Temp Filter Housing
14FHK-HTR
Pages 37 to 40



Extreme High Temp Stainless Steel Filter Housing
14HK-SS
Pages 41 to 45





Giant High Temp Stainless Steel Filter Housing
14FHK-GSS
Pages 46 to 49



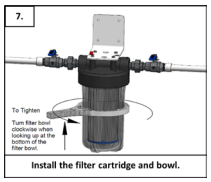

Installation Instructions
Pages 50 to 54

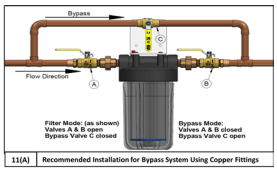

25 Whaley Avenue, PO Box 310
Milverton, ON CANADA N0K 1M0
Tel: 800-561-3164
VISIT US ONLINE AT BOSHART.COM

For more information on installation, adjustment, repair & operation, visit Boshart Knowledge Base at
SUPPORT.BOSHART.COM

© 2026 Boshart Industries Inc. All Rights Reserved.

Filter Selection



Proper filter selection is essential for maintaining water flow, extending cartridge life, and minimizing filtration costs. **Always select the cartridge first and the housing second.** An undersized filter can restrict flow, clog prematurely, and require frequent replacement.

THE FIVE REQUIRED STEPS

1. Test the water

Before selecting a filtration system, test the water to identify specific quality concerns, confirm microbiological safety for drinking and cooking, and determine the type and size of particulate present. Water testing helps establish the appropriate cartridge type and micron rating.

2. Determine the Required Cartridge Type

Water Quality Concern	Recommended Cartridge
Sediment, sand, rust and suspended particles	Spun Polypropylene (SP), Pleated Polyester (PPE) or String Wound (SWP, SWBC)
Taste and odour, including chlorine	Carbon Block (CB), Granular Activated Carbon (GAC) or Carbon Wrap (CW)
Specific contaminants, including cysts or certain VOC's	Cartridge specifically rated and certified for the intended contaminant (CB, GAC, CW)

Sediment cartridges remove particulate, while activated carbon cartridges reduce certain dissolved contaminants, taste and odour. Performance depends on cartridge design and the contaminant being targeted. Always verify the manufacturer's ratings and certifications.

3. Determine the Required Flow Rate

Calculate the peak water demand in gallons per minute (GPM), considering fixtures and appliances that may operate simultaneously. Daily water consumption alone does not determine the required filter flow rate.

Fixture or Appliance	Typical Flow
Dishwasher	2-3 GPM
Washing Machine	4-5 GPM
Bathtub	3-8 GPM
Shower	2-5 GPM
Faucet	2-3 GPM
Toilet	2.5-5 GPM

4. Select the Cartridge Size / Micron Rating

Choose a cartridge with a rated flow capacity above the required peak demand. Clean cartridge flow ratings may decrease as sediment accumulates.

Recommended sizing guidelines:
•Light sediment load: at least 1.5x the required flow
•General applications: approximately 2x the required flow
•Heavy sediment load: up to 3x the required flow where appropriate

Larger cartridges generally provide greater dirt holding capacity and may extend service life.

BOSHART INDUSTRIES
25 Whaley Avenue, PO Box 310
Milverton, ON CANADA N0K 1M0
Tel: 800-561-3164
VISIT US ONLINE AT BOSHART.COM

For more information on installation, adjustment, repair & operation, visit Boshart Knowledge Base at
SUPPORT.BOSHART.COM

© 2026 Boshart Industries Inc. All Rights Reserved.

Available cartridge sizes:
Standard: 2-1/2" & 2-3/4" outside diameter
Giant: 4-1/2" outside diameter
Nominal Lengths: 5", 10" & 20"

Always verify cartridge dimensions, end configuration, and rated capacity. Replace cartridges according to manufacturer recommendations and actual operating conditions.

A 5-micron filter is sufficient for standard whole-house sediment removal and general appliance protection, while a 1-micron filter is best if you need to catch very fine silt or use it as a pre-filter for a drinking water or UV system.

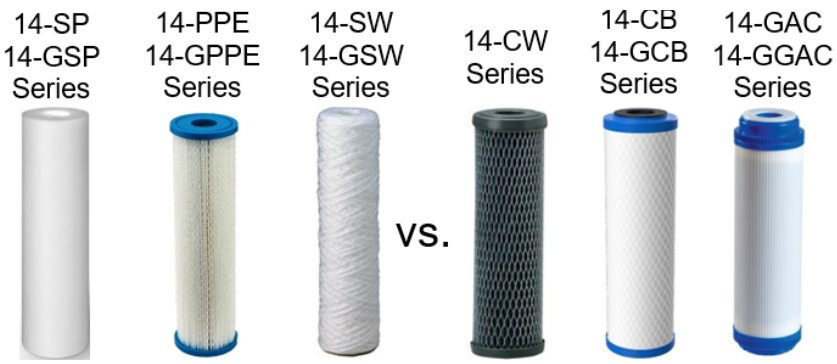

Sediment Filter Cartridges

Activated Carbon (Taste & Odor) Filter Cartridges

5. Select the Filter Housing

Once the cartridge has been selected, choose a housing that accommodates it's dimensions and meets the system's flow, pressure, temperature, and material requirements.

Housing options include:
•Slim
•Standard
•Giant
•Stainless Steel
•High Temperature models

Material options include:
•Polypropylene
•Polypropylene / Styrene- Acrylonitrile
•Polypropylene / Styrene- Acrylonitrile with Stainless Steel Thread Inserts
•Stainless Steel
•Glass Reinforced Nylon (High Temp)

Bowl Options:
•Clear (5-year lifespan) must not be used in direct sunlight
•Blue (10-year lifespan) suitable for use where there is UV exposure
•Red (High Temp) suitable for use where there is UV exposure
•Stainless Steel (High Temp, High Pressure) suitable for use where there is UV exposure



BOSHART INDUSTRIES
25 Whaley Avenue, PO Box 310
Milverton, ON CANADA N0K 1M0
Tel: 800-561-3164
VISIT US ONLINE AT BOSHART.COM

For more information on installation, adjustment, repair & operation, visit Boshart Knowledge Base at
SUPPORT.BOSHART.COM

© 2026 Boshart Industries Inc. All Rights Reserved.

Consider the following when selecting a housing:
•**Material and Temperature:** Select materials compatible with the water chemistry and operating temperature. High temperature or high pressure applications may require specialized housings
•**Bowl Selection:** Clear bowls allow visual inspection but must be protected from direct sunlight where specified. Blue, red and stainless steel options have different UV, temperature and pressure capabilities. Confirm the individual model ranges
•**High Flow Demand:** A larger housing or multiple housings installed in parallel may be necessary
•**Flow velocity:** Match connection sizes to the required flow and acceptable pressure loss. As a general design guideline, limiting water velocity to approximately 5 ft/second is ideal, while 8 ft/second would be the maximum. This corresponds to:

Housing Connection Sizes (FPT)	GPM Range / Flow Velocity (fps) Chart	
	Ideal (5 fps)	Limited to Max (8 fps)
3/4”	7 GPM	11 GPM
1”	12 GPM	19.5 GPM
1-1/2”	27.5 GPM	44 GPM

It is recommended to maintain a flow velocity of 5 to 8 fps approximately 1.5 to 2.44 m/s to prevent excessive pressure drop, erosion/ corrosion, excessive noise/ vibration, cavitation and damage piping and system components due to water hammer. A flow rate of 9 to 10 ft/s to 2.743 to 3.048 m/s could potentially have the above mentioned issues.

SELECT THE RIGHT FILTRATION APPLICATION

Application	Typical Configuration
Point-of-Entry (POE) - Whole House	Sediment filtration at the water supply entry to protect plumbing, fixtures and treatment equipment. Add a carbon stage when whole house taste and odour treatment is required.
Point-of-Use (POU) - Drinking Water	Typically a 10” standard or slim line housing is installed at a drinking water faucet. Smaller 5” systems may be suitable for RV’s, boats, and other space limited applications.
Reverse Osmosis (RO) Pre-Filtration	Sediment and, where specified, carbon cartridges to protect the RO membrane. Follow the RO manufacturer’s micron and compatibility requirements.
Ultraviolet (UV) Pre- Filtration	Sediment filtration to the UV manufacturer’s specified rating, commonly 5 microns or finer, to reduce particles that can shield microorganisms from UV light.

Boshart supplies filtration components for pre and post filtration applications, but does not offer the complete RO or UV treatment systems

NOTE: Cellulose is a natural organic material. Under favourable conditions, it may support microbial growth and biofilm formation, including nuisance bacteria commonly found in untreated water and well water supplies, such as iron and sulfur related bacteria.

BOSHART INDUSTRIES
25 Whaley Avenue, PO Box 310
Milverton, ON CANADA N0K 1M0
Tel: 800-561-3164
VISIT US ONLINE AT BOSHART.COM

For more information on installation, adjustment, repair & operation, visit Boshart Knowledge Base at
SUPPORT.BOSHART.COM

© 2026 Boshart Industries Inc. All Rights Reserved.

FILTER CARTRIDGES

Boshart offers a variety of water filter cartridges designed to address common water quality concerns, including sediment, taste, and odour. Selecting the proper cartridge depends on the water condition, required flow rate, cartridge size, and filtration application.

WARNING: Always Test Water - Never use sediment/ taste and odour cartridges with water that is microbiologically unsafe or of unknown quality without adequate disinfection before or after the filtration system. These cartridges will not remove harmful contaminants/ bacteria. An NSF 53 certified water filter has been independently tested and certified by NSF International (or another accredited organization like the Water Quality Association) to reduce specific health-related contaminants rather than just aesthetic traits like taste or odour.

CARTRIDGE TYPES

Sediment Filtration - Designed to remove particulate such as sand, silt, dirt, scale, and rust.

These include:
•spun polypropylene (14-(G)SP)
•pleated polyester (14-(G)PPE)
•string wound polypropylene (14-(G)SWP)
•string wound bleached cotton (14-(G)SWBC) (not for potable water)
•string wound natural cotton (14-SWNC) (not for potable water)

Taste & Odour Filtration - Used to reduce undesirable taste and odour and, in certain applications, nuisance compounds.

These include:
•carbon block (14-(G)CB)
•carbon briquette (14-(G)CCR) Cryptosporidium and Giardia cyst reduction (not certified to NSF 53)
•granular activated carbon (14-(G)GAC)
•carbon wrap (14-(G)CW)
•in-line ice maker cartridges (14-IM)



NSF/ANSI/CAN Standard 42 - Drinking Water Treatment Units (Aesthetic Effects) - Covers point-of-use and point-of-entry (POU / POE) systems designed to reduce specific aesthetic, or non-health effects contaminants (chlorine, TDS, particulates) that may be found in drinking water that is considered to be microbiologically safe.
Change Out - Replacement filter cartridges have a limited service life. Changes in taste, colour and flow of the water (other liquid) being filtered are signals that replacement of the cartridge may be necessary.

BOSHART INDUSTRIES
25 Whaley Avenue, PO Box 310
Milverton, ON CANADA N0K 1M0
Tel: 800-561-3164
VISIT US ONLINE AT BOSHART.COM

For more information on installation, adjustment, repair & operation, visit Boshart Knowledge Base at
SUPPORT.BOSHART.COM

© 2026 Boshart Industries Inc. All Rights Reserved.

STANDARD CARTRIDGE SIZES

Standard cartridges feature a Double Open End (DOE) configuration and fit most North American filter housings.

Compatible brands and systems include:
•Ametek / US Filter (The historical precursor to Pentek)
•American Plumber
•Culligan
•Whirlpool
•GE (General Electric)
•3M / Aqua-Pure
•Watts
•Hydronix
•Aqua Flo / Canature
•Axeon
•Omnipure
•NuvoH2O (For their standard 2.5” diameter systems)
•Home Master
•iSpring
•Express Water
•Apec Water Systems
•Geekpure

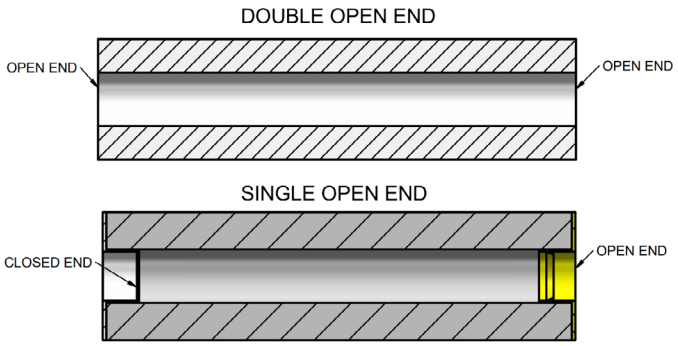

Not compatible with Rainfresh filter housings. Rainfresh standard housings require special Single Open End (SOE) filter cartridges.

Cartridge Diameters: 2-1/2” & 2-3/4”

5” Nominal Length — compact applications and limited-space installations
10” Nominal Length — standard cartridge length
20” Nominal Length — double-length cartridge for increased capacity

GIANT CARTRIDGE SIZES

Giant cartridges feature a double open end (DOE) configuration and are compatible with most North American filter housings including Rainfresh. Rainfresh giant housings use standard double open end (DOE).

Compatible brands and systems include:
•Culligan: Fits all heavy-duty models like the HD-950A or WH-HD200-C
•iSpring: Fits their entire lineup of high-flow whole-house systems (e.g., the WGB21B or WGB32B series)
•Home Master: Fits their high-capacity whole-house systems
•Aqua-Pure / 3M: Fits heavy-duty models like the AP801, AP801-C, or AP802
•American Plumber: Fits all heavy-duty lines like the W10-PR or W20-PR.
•Hydronix: Fits their HX-HF45 series of 10” and 20” wide-body sumps
•Watts: Fits their “Big Bubba” and heavy-duty generic commercial housings
•Geekpure & Express Water: Fits their heavy-duty multi-stage whole-house filtration arrays
•Apec Water Systems: Fits their 10” and 20” giant main-line filter housings
•Omnifilter: Fits their heavy-duty BF series housings (like the BF7 or BF35)
•Flomatic & neoPure: Universal commercial-grade giant filter sumps

Cartridge Diameter: 4-1/2”

10” Nominal Length — standard cartridge length
20” Nominal Length — double-length cartridge for increased capacity

Larger diameter/ longer cartridges provide greater flow capacity and filtration capacity. When selecting a cartridge, choose a flow capacity significantly higher than the system’s required flow rate. As a general rule, select a cartridge rated for approximately 2× the desired flow, with 1.5× potentially suitable for light sediment loads and up to 3× recommended for heavy sediment loads.

BOSHART INDUSTRIES
25 Whaley Avenue, PO Box 310
Milverton, ON CANADA N0K 1M0
Tel: 800-561-3164
VISIT US ONLINE AT BOSHART.COM

For more information on installation, adjustment, repair & operation, visit Boshart Knowledge Base at
SUPPORT.BOSHART.COM

© 2026 Boshart Industries Inc. All Rights Reserved.

14-(G)PPE SERIES PLEATED POLYESTER SEDIMENT CARTRIDGE



APPLICATION:
- Whole house Point-of-Entry (POE) well water and municipal water filtration
- Pre filtration for water treatment systems such as UV and reverse osmosis (RO)
- Commercial and industrial applications

WARNING: Always Test Water - Never use sediment/ taste and odour cartridges with water that is microbiologically unsafe or of unknown quality without adequate disinfection before or after the filtration system. These cartridges will not remove harmful contaminants/ bacteria. An NSF 53 certified water filter has been independently tested and certified by NSF International (or another accredited organization like the Water Quality Association) to reduce specific health-related contaminants rather than just aesthetic traits like taste or odour

FEATURES/SPECIFICATIONS:
- Pleated surface area provides greater sediment and dirt holding capacity while maintaining flow rate and reducing initial pressure drop
- Non-woven polyester filter media is pleated around a polypropylene core for added strength and stability
- FDA Approved
- Designed to seal on a knife seat to prevent bypass
- Cartridges are compatible with the majority of brands of filter housings using double open end (DOE) **CAUTION:** Standard size cartridges are not compatible with Rainfresh Single Open End (SOE), however the giants are compatible with Rainfresh Double Open End (DOE) cartridges
- Washable **CAUTION:** Cartridges can be cleaned and reused in industrial applications (not recommended for potable water filtration where there could be bacterial growth)
- Efficiency:

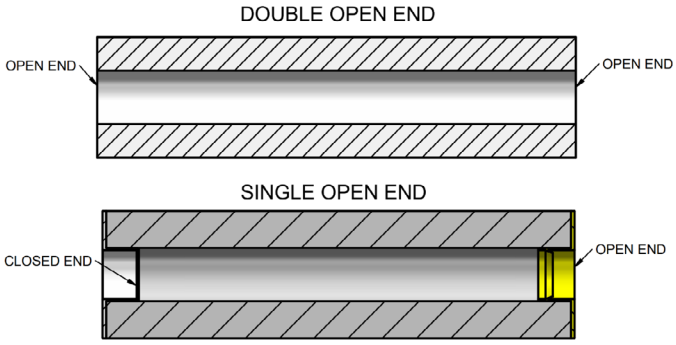

RATINGS:
- Max Temperature Rating: 140°F (60°C)
- Maximum Pressure Rating: 125 PSI

SHELF LIFE / STORAGE:
- Pleated polyester cartridges are generally suitable for long term dry storage when kept in their original packaging. However, excessive heat, UV exposure, and physical damage can affect the filter media and the materials used to bond the pleats and end caps. Supplier specified shelf life is 5 years when stored in an environment with relative humidity lower than 65%
- Unused filter cartridges should be stored in their original, unopened packaging until ready for installation. For -2PK part number cartridges, once the package has been opened, the remaining unused cartridge should be wrapped in plastic wrap or in a sealed bag to prevent exposure to moisture, dust and environmental contaminants

BOSHART INDUSTRIES
25 Whaley Avenue, PO Box 310
Milverton, ON CANADA N0K 1M0
Tel: 800-561-3164
VISIT US ONLINE AT BOSHART.COM

For more information on installation, adjustment, repair & operation, visit Boshart Knowledge Base at
SUPPORT.BOSHART.COM

© 2026 Boshart Industries Inc. All Rights Reserved.

No.	Item	Material
1	Top Gasket	TPR (Thermoplastic Rubber)
2	Top End Cap	Polypropylene
2	Filter Core	Polypropylene
4	Filter Media	Non-Woven Polyester
5	Outer Netting	Polypropylene
6	Bottom End Cap	Polypropylene
7	Bottom Gasket	TPR (Thermoplastic Rubber)

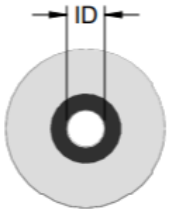

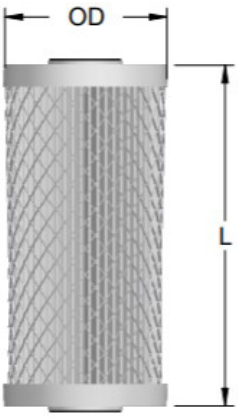

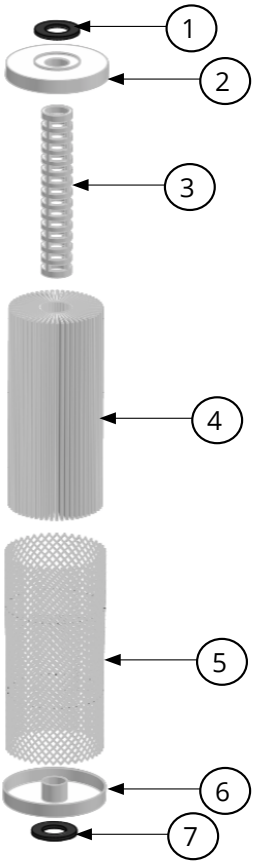

DIMENSIONS											
Part No.	Flow Rate PSI Drop @ GPM	Inner Micron Rating	Outer Micron Rating	Inner Diameter (I.D.)		Outer Diameter (O.D.)		Length (L)		Weight	
				in	mm	in	mm	in	mm	lbs	grams
STANDARD, NOMINAL SIZE 2-1/2" X 10" (2PK indicates package of 2 cartridges)											
14-PPE1-01	1 PSI @ 10 GPM	1	1	1.00	25.40	2.75	69.85	9.75	247.65	0.44	200
14-PPE1-05		5	5								
14-PPE1-05-2PK		5	5								
14-PPE1-10		10	10								
14-PPE1-20		20	20							0.27	120
14-PPE1-20-2PK		20	20								
14-PPE1-50		50	50								
STANDARD, NOMINAL SIZE 2-1/2" X 20"											
14-PPE2-05	1 PSI @ 10 GPM	5	5	1.00	25.40	2.75	69.85	20.00	508.00	0.66	300
14-PPE2-20		20	20								
GIANT, NOMINAL SIZE 4-1/2" X 10"											
14-GPPE1-01	1 PSI @ 10 GPM	1	1	1.00	25.40	4.50	114.30	9.75	247.65	0.64	290
14-GPPE1-05		5	5								
14-GPPE1-10		10	10								
14-GPPE1-20		20	20								
14-GPPE1-50		50	50								
GIANT, NOMINAL SIZE 4-1/2" X 20"											
14-GPPE2-01	1 PSI @ 20 GPM	1	1	1.00	25.40	4.50	114.30	20.00	508.00	1.32	600
14-GPPE2-05		5	5								
14-GPPE2-20		20	20								
14-GPPE2-50		50	50								

BOSHART INDUSTRIES
25 Whaley Avenue, PO Box 310
Milverton, ON CANADA N0K 1M0
Tel: 800-561-3164

VISIT US ONLINE AT BOSHART.COM

For more information on installation, adjustment, repair & operation, visit Boshart Knowledge Base at SUPPORT.BOSHART.COM

© 2026 Boshart Industries Inc. All Rights Reserved.

14-(G)SP SERIES SPUN POLYPROPYLENE SEDIMENT CARTRIDGE



APPLICATIONS:
- Whole house Point-of-Entry (POE) well water and municipal water filtration
- Pre filtration for water treatment systems such as UV and reverse osmosis (RO)
- Commercial and industrial applications

WARNING: Always Test Water - Never use sediment/ taste and odour cartridges with water that is microbiologically unsafe or of unknown quality without adequate disinfection before or after the filtration system. These cartridges will not remove harmful contaminants/ bacteria. An NSF 53 certified water filter has been independently tested and certified by NSF International (or another accredited organization like the Water Quality Association) to reduce specific health-related contaminants rather than just aesthetic traits like taste or odour

FEATURES/SPECIFICATIONS:
- Melt blown gradient manufacturing process provides superior filter efficiency, pressure drop and filter life
- Gradient four (4) layer (outside-in), varied micron filter structure effectively captures particles largest to smallest
- Good chemical resistance and not prone to bacterial attack
- 100% melt blown micron denier polypropylene fiber
- FDA Approved
- Designed to seal on a knife seat to prevent bypass
- Cartridges are compatible with the majority of brands of filter housings using double open end (DOE) **CAUTION:** Standard size cartridges are not compatible with Rainfresh Single Open End (SOE), however the giants are compatible with Rainfresh Double Open End (DOE) cartridges
- Efficiency:

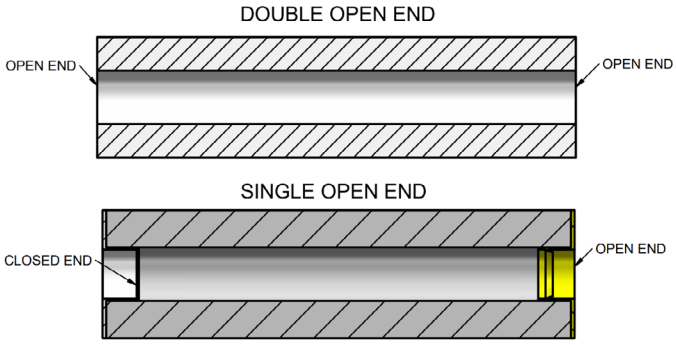

CERTIFICATIONS:
- NSF/ANSI 42 - Drinking Water Treatment Units - Aesthetic Effect-

*Covers Point-of-Use and Point-of-Entry (POU / POE) systems designed to reduce specific aesthetic, or non-health effects contaminants (chlorine, TDS, particulates) that may be found in drinking water that is considered to be microbiologically safe.

RATINGS:
- Max Operating Forward Pressure: 68°F (20°C): 45.5 PSI (302 kg/cm²)
- * If working pressure is consistently over 60 PSI, a pressure regulator valve is recommended to protect the filter bowl and all downstream appliances and faucets
- Maximum Temperature Rating: 125°F (52°C)

SHELF LIFE / STORAGE:
- Spun polypropylene cartridges are made from synthetic fibers that are generally stable when stored properly. However, prolonged exposure to direct sunlight, UV radiation, excessive heat and airborne contaminants can affect the condition of the filter media. Supplier specified shelf life is 5 years, if stored in an environment with relative humidity lower than 65%
- Unused filter cartridges should be stored in their original, unopened packaging until ready for installation. For -2PK part number cartridges, once the package has been opened, the remaining unused cartridge should be wrapped in plastic wrap or in a sealed bag to prevent exposure to moisture, dust and environmental contaminants

BOSHART INDUSTRIES
25 Whaley Avenue, PO Box 310
Milverton, ON CANADA N0K 1M0
Tel: 800-561-3164
VISIT US ONLINE AT BOSHART.COM

For more information on installation, adjustment, repair & operation, visit Boshart Knowledge Base at
SUPPORT.BOSHART.COM

© 2026 Boshart Industries Inc. All Rights Reserved.

MATERIAL LIST	
Item	**Material**
Filter Media	Polypropylene

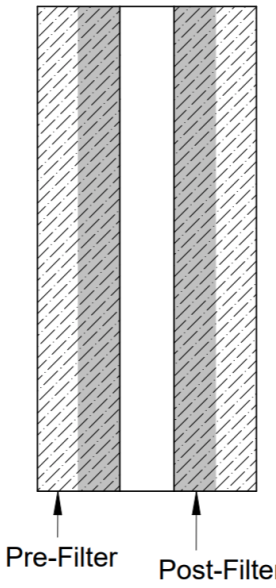

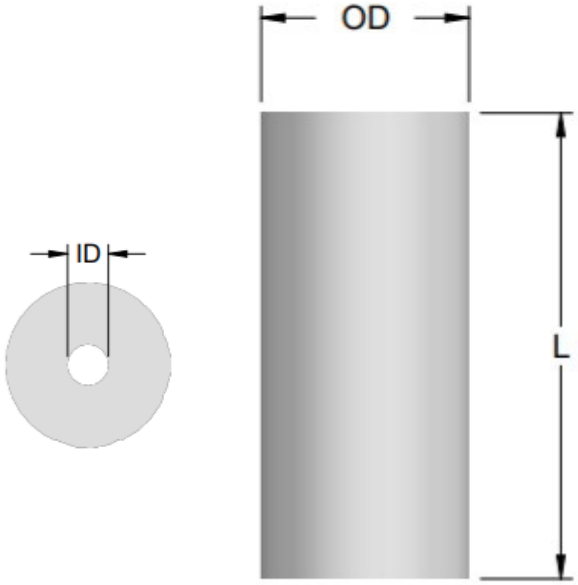

DIMENSIONS											
Part No.	**Flow Rate PSI Drop @ GPM**	**Inner Micron Rating**	**Outer Micron Rating**	**Inner Diameter (I.D.)**		**Outer Diameter (O.D.)**		**Length (L)**		**Weight**	
				in	**mm**	**in**	**mm**	**in**	**mm**	**lbs**	**grams**
STANDARD, NOMINAL SIZE 2-1/2" X 10" (2PK indicates package of 2 cartridges)											
14-SP1-01	1 PSI @ 3 GPM	1	25	1.10	28.00	2.48	63.00	9.88	251.00	0.29	130
14-SP1-05	1 PSI @ 5 GPM	5	50	1.10	28.00	2.48	63.00	9.88	251.00	0.29	130
14-SP1-05-2PK	1 PSI @ 5 GPM	5	50	1.10	28.00	2.48	63.00	9.88	251.00	0.59	260
14-SP1-10	1 PSI @ 10 GPM	10	75	1.10	28.00	2.48	63.00	9.88	251.00	0.29	130
14-SP1-25	1 PSI @ 12 GPM	25	75	1.10	28.00	2.48	63.00	9.88	251.00	0.29	130
14-SP1-25-2PK	1 PSI @ 12 GPM	25	75	1.10	28.00	2.48	63.00	9.88	251.00	0.59	260
14-SP1-50	1 PSI @ 17 GPM	50	100	1.10	28.00	2.48	63.00	9.88	251.00	0.29	130
STANDARD, NOMINAL SIZE 2-1/2" X 20"											
14-SP2-01	1 PSI @ 6 GPM	1	25	1.10	28.00	2.48	63.00	20.00	508.00	0.64	290
14-SP2-05	1 PSI @ 10 GPM	5	50	1.10	28.00	2.48	63.00	20.00	508.00	0.64	290
14-SP2-10	1 PSI @ 20 GPM	10	75	1.10	28.00	2.48	63.00	20.00	508.00	0.64	290
14-SP2-25	1 PSI @ 30 GPM	25	75	1.10	28.00	2.48	63.00	20.00	508.00	0.64	290
14-SP2-50	1 PSI @ 35 GPM	50	100	1.10	28.00	2.48	63.00	20.00	508.00	0.64	290
GIANT, NOMINAL SIZE 4-1/2" X 10"											
14-GSP1-01	1 PSI @ 10 GPM	1	25	1.10	28.00	4.49	114.00	9.88	251.00	1.06	480
14-GSP1-05	1 PSI @ 15 GPM	5	50	1.10	28.00	4.49	114.00	9.88	251.00	1.06	480
14-GSP1-10	1 PSI @ 20 GPM	10	75	1.10	28.00	4.49	114.00	9.88	251.00	1.06	480
14-GSP1-25	1 PSI @ 25 GPM	25	75	1.10	28.00	4.49	114.00	9.88	251.00	1.06	480
GIANT, NOMINAL SIZE 4-1/2" X 20"											
14-GSP2-01	1 PSI @ 15 GPM	1	25	1.10	28.00	4.49	114.00	20.00	508.00	2.12	960
14-GSP2-05	1 PSI @ 25 GPM	5	50	1.10	28.00	4.49	114.00	20.00	508.00	2.12	960
14-GSP2-10	1 PSI @ 30 GPM	10	75	1.10	28.00	4.49	114.00	20.00	508.00	2.12	960
14-GSP2-25	1 PSI @ 35 GPM	25	75	1.10	28.00	4.49	114.00	20.00	508.00	2.12	960

BOSHART INDUSTRIES
25 Whaley Avenue, PO Box 310
Milverton, ON CANADA N0K 1M0
Tel: 800-561-3164
VISIT US ONLINE AT BOSHART.COM

For more information on installation, adjustment, repair & operation, visit Boshart Knowledge Base at
SUPPORT.BOSHART.COM

© 2026 Boshart Industries Inc. All Rights Reserved.

14-(G)SWP SERIES STRING WOUND POLYPROPYLENE FILTER CARTRIDGE

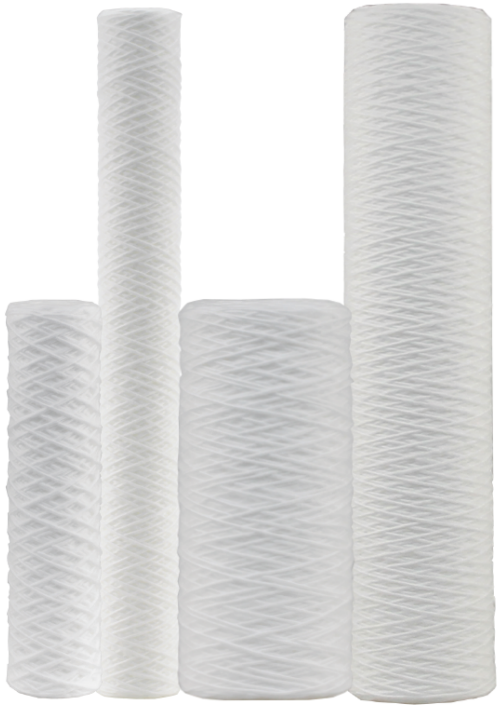

APPLICATIONS:

- Used in a wide range of filtering applications, polypropylene has a broad chemical compatibility and has excellent resistance to micro-organisms
- Whole house and Point-of-Entry (POE) sediment filtration
- Water well and municipal water filtration
- Pre filtration for UV, reverse osmosis (RO) water systems

WARNING: Always Test Water - Never use sediment/ taste and odour cartridges with water that is microbiologically unsafe or of unknown quality without adequate disinfection before or after the filtration system. These cartridges will not remove harmful contaminants/ bacteria. An NSF 53 certified water filter has been independently tested and certified by NSF International (or another accredited organization like the Water Quality Association) to reduce specific health-related contaminants rather than just aesthetic traits like taste or odour

FEATURES/SPECIFICATIONS:

- Diagonally wound pattern provides maximum surface area for efficient particle filtration
- Designed to seal on a knife seat to prevent bypass
- Cartridges are compatible with the majority of brands of filter housings using double open end (DOE) **CAUTION:** Standard size cartridges are not compatible with Rainfresh Single Open End (SOE), however the giants are compatible with Rainfresh Double Open End (DOE) cartridges
- 90-95% efficiency

CERTIFICATIONS:

- NSF/ANSI 42 - Drinking Water Treatment Units - Aesthetic Effects

*Covers Point-of-Use and Point-of-Entry (POU / POE) systems designed to reduce specific aesthetic, or non-health effects contaminants (chlorine, TDS, particulates) that may be found in drinking water that is considered to be microbiologically safe.

- NSF/ANSI/CAN Standard 372 Certified (Drinking Water System Components - Lead Content)

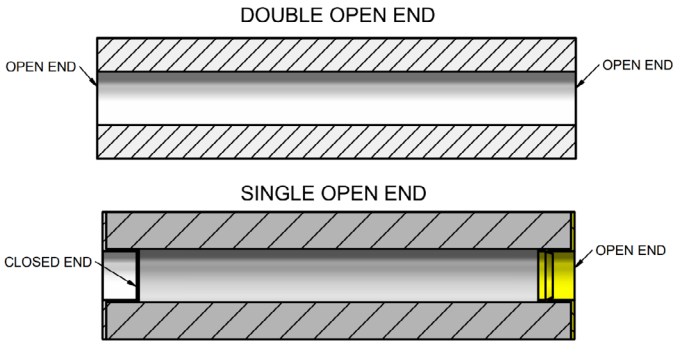

RATINGS:

- Maximum Temperature Rating: 120°F (48°C)

SHELF LIFE / STORAGE:

- String wound polypropylene cartridges are made from synthetic fibers and generally maintain their properties during dry storage. However, exposure to excessive heat, UV radiation and environmental contaminants should be avoided. No specific shelf life established by the supplier
- Unused filter cartridges should be stored in their original, unopened packaging until ready for installation. For -2PK part number cartridges, once the package has been opened, the remaining unused cartridge should be wrapped in plastic wrap or in a sealed bag to prevent exposure to moisture, dust and environmental contaminants

BOSHART INDUSTRIES
25 Whaley Avenue, PO Box 310
Milverton, ON CANADA N0K 1M0
Tel: 800-561-3164
VISIT US ONLINE AT BOSHART.COM

For more information on installation, adjustment, repair & operation, visit Boshart Knowledge Base at
SUPPORT.BOSHART.COM

© 2026 Boshart Industries Inc. All Rights Reserved.

BII-14-(G)SWP-0726(2624) V2

MATERIAL LIST		
No.	**Item**	**Material**
1	Filter Core	Polypropylene
2	Filter Media	Polypropylene

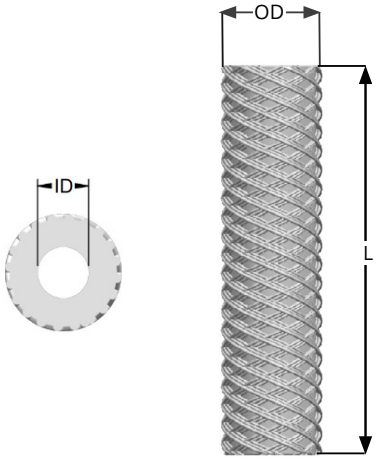



DIMENSIONS										
Part No.	**Flow Rate PSI Drop @ GPM**	**Micron Rating**	**Inner Diameter (I.D.)**		**Outer Diameter (O.D.)**		**Length (L)**		**Weight**	
			in	**mm**	**in**	**mm**	**in**	**mm**	**lbs**	**grams**
STANDARD, NOMINAL SIZE 2-1/2" X 10" (2PK indicates package of 2 cartridges)										
14-SWP1-01	1 PSI @ 3 GPM	1	1.00	25.40	2.50	63.50	9.88	250.83	0.43	197
14-SWP1-05	1 PSI @ 5 GPM	5	1.00	25.40	2.50	63.50	9.88	250.83	0.43	197
14-SWP1-05-2PK	1 PSI @ 5 GPM	5	1.00	25.40	2.50	63.50	9.88	250.83	0.43	197
14-SWP1-10	1 PSI @ 10 GPM	10	1.00	25.40	2.50	63.50	9.88	250.83	0.40	181
14-SWP1-25	1 PSI @ 15 GPM	25	1.00	25.40	2.50	63.50	9.88	250.83	0.40	181
14-SWP1-25-2PK	1 PSI @ 15 GPM	25	1.00	25.40	2.50	63.50	9.88	250.83	0.40	181
14-SWP1-50	1 PSI @ 20 GPM	50	1.00	25.40	2.50	63.50	9.88	250.83	0.40	181
STANDARD, NOMINAL SIZE 2-1/2" X 20"										
14-SWP2-01	1 PSI @ 6 GPM	1	1.00	25.40	2.50	63.50	20.00	508.00	0.87	393
14-SWP2-05	1 PSI @ 10 GPM	5	1.00	25.40	2.50	63.50	20.00	508.00	0.87	393
14-SWP2-10	1 PSI @ 20 GPM	10	1.00	25.40	2.50	63.50	20.00	508.00	0.80	363
14-SWP2-25	1 PSI @ 30 GPM	25	1.00	25.40	2.50	63.50	20.00	508.00	0.80	363
14-SWP2-50	1 PSI @ 50 GPM	50	1.00	25.40	2.50	63.50	20.00	508.00	0.80	363
GIANT, NOMINAL SIZE 4-1/2" X 10"										
14-GSWP1-01	1 PSI @ 8 GPM	1	1.00	25.40	4.50	114.30	10.00	254.00	1.62	734
14-GSWP1-05	1 PSI @ 15 GPM	5	1.00	25.40	4.50	114.30	10.00	254.00	1.62	734
14-GSWP1-10	1 PSI @ 20 GPM	10	1.00	25.40	4.50	114.30	10.00	254.00	1.62	734
14-GSWP1-25	1 PSI @ 25 GPM	25	1.00	25.40	4.50	114.30	10.00	254.00	1.50	680
14-GSWP1-50	1 PSI @ 35 GPM	50	1.00	25.40	4.50	114.30	10.00	254.00	1.50	680
GIANT, NOMINAL SIZE 4-1/2" X 20"										
14-GSWP2-01	1 PSI @ 16 GPM	1	1.00	25.40	4.50	114.30	20.00	508.00	3.75	1700
14-GSWP2-05	1 PSI @ 30 GPM	5	1.00	25.40	4.50	114.30	20.00	508.00	3.50	1588
14-GSWP2-10	1 PSI @ 40 GPM	10	1.00	25.40	4.50	114.30	20.00	508.00	3.50	1588
14-GSWP2-25	1 PSI @ 50 GPM	25	1.00	25.40	4.50	114.30	20.00	508.00	3.25	1475
14-GSWP2-50	1 PSI @ 65 GPM	50	1.00	25.40	4.50	114.30	20.00	508.00	3.25	1475

String wound cartridges do not have separate inner and outer micron ratings, as particles are captured throughout the wound layers.

BOSHART INDUSTRIES
25 Whaley Avenue, PO Box 310
Milverton, ON CANADA N0K 1M0
Tel: 800-561-3164
VISIT US ONLINE AT BOSHART.COM

For more information on installation, adjustment, repair & operation, visit Boshart Knowledge Base at SUPPORT.BOSHART.COM

© 2026 Boshart Industries Inc. All Rights Reserved.

14-(G)SWBC SERIES STRING WOUND BLEACHED COTTON FILTER CARTRIDGE



APPLICATIONS:

- For removing very fine sediment through to very coarse sediment in a wide range of non-potable water filtering applications
- High Temperature liquid filtration applications
- Pharmaceuticals: High-purity liquid filtration demanding natural materials and higher thermal resistance
- Industrial and Petrochemical Processes: Filtering organic solvents, petroleum oils, dilute acids, and industrial oils

WARNING: Always Test Water - Never use sediment/ taste and odour cartridges with water that is microbiologically unsafe or of unknown quality without adequate disinfection before or after the filtration system. These cartridges will not remove harmful contaminants/ bacteria. An NSF 53 certified water filter has been independently tested and certified by NSF International (or another accredited organization like the Water Quality Association) to reduce specific health-related contaminants rather than just aesthetic traits like taste or odour

FEATURES/SPECIFICATIONS:

- Manufactured from bleached cotton fibers wound on to a 304 Stainless Steel core
- Manufactured from FDA Bleach Cotton with ingredients for food contact (not 3rd party certified to NSF 61 Health Effects)
- Diagonally wound pattern provides maximum surface area for efficient particle filtration
- Complies with California Prop 65
- Designed to seal on a knife seat to prevent bypass
- Cartridges are compatible with the majority of brands of filter housings using double open end (DOE) **CAUTION:** Standard size cartridges are not compatible with Rainfresh Single Open End (SOE), however the giants are compatible with Rainfresh Double Open End (DOE) cartridges
- 90-95% efficiency

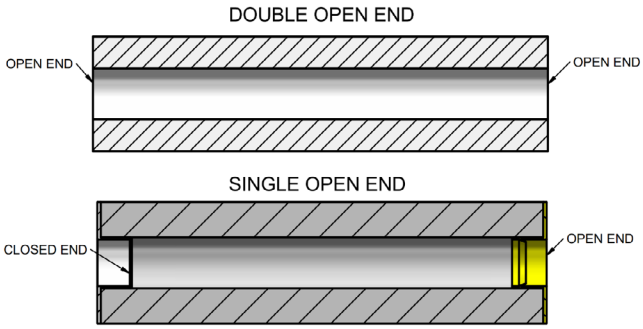

RATINGS:

- Maximum Temperature Rating: 300°F (149°C)
- Maximum Pressure Differential: 30 to 40 PSI differential (at which time cartridge change out is required) - At maximum operating temperatures, manufacturers recommend keeping the maximum running differential pressure closer to 15 to 20 PSI differential

CAUTION: For potable water applications, we recommend synthetic cartridges. Natural cotton filters are not suitable for long-term potable water systems because they rot, breed bacteria, and break down quickly when exposed to constant moisture. They will not remove heavy metals, chlorine or microscopic pathogens and will dissolve chemicals.

SHELF LIFE / STORAGE:

- String wound cotton cartridges contain natural fibers that can absorb moisture and surrounding odours. Exposure to humidity or damp storage conditions may promote mold and mildew growth, potentially making the cartridge unsuitable for use. No specific shelf life established by the supplier
- Unused filter cartridges should be stored in their original, unopened packaging until ready for installation. For -2PK part number cartridges, once the package has been opened, the remaining unused cartridge should be wrapped in plastic wrap or in a sealed bag to prevent exposure to moisture, dust and environmental contaminants

BOSHART INDUSTRIES
25 Whaley Avenue, PO Box 310
Milverton, ON CANADA N0K 1M0
Tel: 800-561-3164
VISIT US ONLINE AT BOSHART.COM

For more information on installation, adjustment, repair & operation, visit Boshart Knowledge Base at SUPPORT.BOSHART.COM

© 2026 Boshart Industries Inc. All Rights Reserved.

MATERIAL LIST		
No.	**Item**	**Material**
1	Filter Core	304 Stainless Steel
2	Filter Media	Bleached Cotton

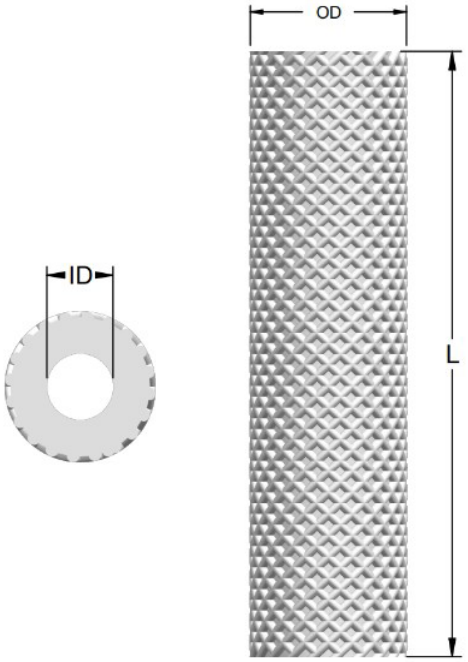

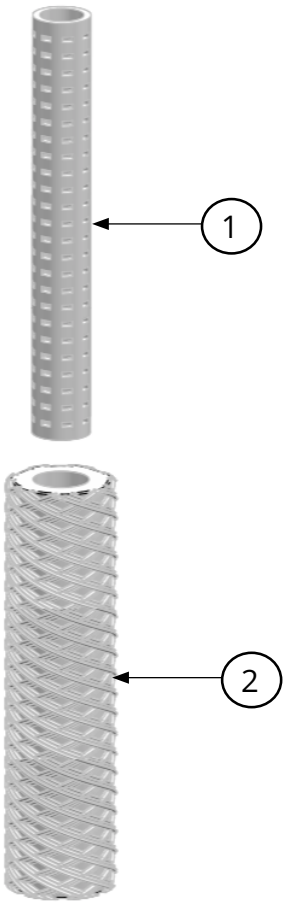

DIMENSIONS										
Part No.	**Flow Rate PSI Drop @ GPM**	**Micron Rating**	**Inner Diameter (I.D.)**		**Outer Diameter (O.D.)**		**Length (L)**		**Weight**	
			in	**mm**	**in**	**mm**	**in**	**mm**	**lbs**	**grams**
STANDARD, NOMINAL SIZE 2-1/2" X 10"										
14-SWBC1-05	1 PSI @ 5 GPM	5	1.00	25.40	2.50	63.50	9.88	250.83	0.47	212
14-SWBC1-10	1 PSI @ 10 GPM	10	1.00	25.40	2.50	63.50	9.88	250.83	0.47	212
14-SWBC1-50	1 PSI @ 50 GPM	50	1.00	25.40	2.50	63.50	9.88	250.83	0.43	197
STANDARD, NOMINAL SIZE 2-1/2" X 20"										
14-SWBC2-05	1 PSI @ 10 GPM	5	1.00	25.40	2.50	63.50	20.00	508.00	0.93	423
14-SWBC2-10	1 PSI @ 20 GPM	10	1.00	25.40	2.50	63.50	20.00	508.00	0.93	423
GIANT, NOMINAL SIZE 4-1/2" X 10"										
14-GSWBC1-05	1 PSI @ 12 GPM	5	1.00	25.40	4.50	114.30	10.00	254.00	1.87	850
14-GSWBC1-10	1 PSI @ 13 GPM	10	1.00	25.40	4.50	114.30	10.00	254.00	1.87	850
GIANT, NOMINAL SIZE 4-1/2" X 20"										
14-GSWBC2-05	1 PSI @ 22 GPM	5	1.00	25.40	4.50	114.30	20.00	508.00	3.67	1665
14-GSWBC2-10	1 PSI @ 24 GPM	10	1.00	25.40	4.50	114.30	20.00	508.00	3.75	1700

String wound cartridges do not have separate inner and outer micron ratings, as particles are captured throughout the wound layers.

BOSHART INDUSTRIES

25 Whaley Avenue, PO Box 310
Milverton, ON CANADA N0K 1M0
Tel: 800-561-3164

VISIT US ONLINE AT BOSHART.COM

For more information on installation, adjustment, repair & operation, visit Boshart Knowledge Base at SUPPORT.BOSHART.COM

© 2026 Boshart Industries Inc. All Rights Reserved.

14-SWNC SERIES STRING WOUND NATURAL COTTON FILTER CARTRIDGE

APPLICATIONS:

- For removing very fine sediment through to very coarse sediment in a wide range of non-potable water filtering applications
- High Temperature liquid filtration applications
- Pharmaceuticals: High-purity liquid filtration demanding natural materials and higher thermal resistance
- Industrial and Petrochemical Processes: Filtering organic solvents, petroleum oils, dilute acids, and industrial oils



WARNING: Always Test Water - Never use sediment/ taste and odour cartridges with water that is microbiologically unsafe or of unknown quality without adequate disinfection before or after the filtration system. These cartridges will not remove harmful contaminants/ bacteria. An NSF 53 certified water filter has been independently tested and certified by NSF International (or another accredited organization like the Water Quality Association) to reduce specific health-related contaminants rather than just aesthetic traits like taste or odour

FEATURES/SPECIFICATIONS:

- Diagonally wound pattern provides maximum surface area for efficient particle filtration
- Tin core provides a general purpose support structure for the wound filter media
- Designed to seal on a knife seat to prevent bypass
- Cartridges are compatible with the majority of brands of filter housings using double open end (DOE) **CAUTION:** Standard size cartridges are not compatible with Rainfresh Single Open End (SOE)
- 90-95% efficiency

RATINGS:

- Temperature Rating: 300°F (149°C)
- Maximum Pressure Differential: 30 to 40 PSI differential (at which time cartridge change out is required) - At maximum operating temperatures, manufacturers recommend keeping the maximum running differential pressure closer to 15 to 20 PSI differential

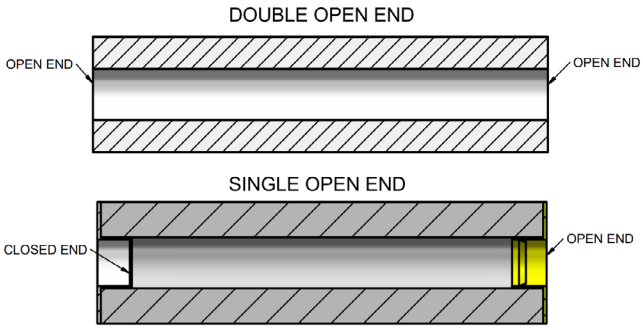

SHELF LIFE / STORAGE:

- String wound cotton cartridges contain natural fibers that can absorb moisture and surrounding odours. Exposure to humidity or damp storage conditions may promote mold and mildew growth, potentially making the cartridge unsuitable for use. No specific shelf life established by the supplier.
- Unused filter cartridges should be stored in their original, unopened packaging until ready for installation. For -2PK part number cartridges, once the package has been opened, the remaining unused cartridge should be wrapped in plastic wrap or in a sealed bag to prevent exposure to moisture, dust and environmental contaminants

CAUTION: For potable water applications, we recommend synthetic cartridges. Natural cotton filters are not suitable for long-term potable water systems because they rot, breed bacteria, and break down quickly when exposed to constant moisture. They will not remove heavy metals, chlorine or microscopic pathogens and will dissolve chemicals.

BOSHART INDUSTRIES
25 Whaley Avenue, PO Box 310
Milverton, ON CANADA N0K 1M0
Tel: 800-561-3164
VISIT US ONLINE AT BOSHART.COM

For more information on installation, adjustment, repair & operation, visit Boshart Knowledge Base at
SUPPORT.BOSHART.COM

© 2026 Boshart Industries Inc. All Rights Reserved.

MATERIAL LIST		
No.	**Item**	**Material**
1	Filter Core	Tin
2	Filter Media	Natural Cotton

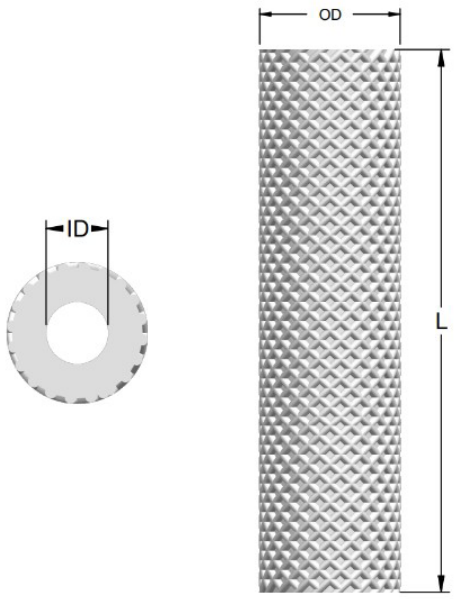



DIMENSIONS										
Part No.	**Micron Rating**	**Flow Rate PSI Drop @ GPM**	**Inner Diameter (I.D.)**		**Outer Diameter (O.D.)**		**Length (L)**		**Weight**	
			in	**mm**	**in**	**mm**	**in**	**mm**	**lbs**	**grams**
STANDARD, NOMINAL SIZE 2-1/2" X 10"										
14-SWNC1-05	5	1 PSI @ 5 GPM	1.00	25.40	2.50	63.50	9.88	250.83	0.46	210
14-SWNC1-10	10	1 PSI @ 10 GPM	1.00	25.40	2.50	63.50	9.88	250.83	0.46	210
14-SWNC1-20	20	1 PSI @ 20 GPM	1.00	25.40	2.50	63.50	9.88	250.83	0.46	210
14-SWNC1-25	25	1 PSI @ 25 GPM	1.00	25.40	2.50	63.50	9.88	250.83	0.46	210
14-SWNC1-50	50	1 PSI @ 50 GPM	1.00	25.40	2.50	63.50	9.88	250.83	0.47	212
STANDARD, NOMINAL SIZE 2-1/2" x 20"										
14-SWNC2-05	5	1 PSI @ 10 GPM	1.00	25.40	2.50	63.50	20.00	508.00	0.93	420
14-SWNC2-10	10	1 PSI @ 20 GPM	1.00	25.40	2.50	63.50	20.00	508.00	0.93	420
14-SWNC2-20	20	1 PSI @ 40 GPM	1.00	25.40	2.50	63.50	20.00	508.00	0.93	420

String wound cartridges do not have separate inner and outer micron ratings, as particles are captured throughout the wound layers.

BOSHART INDUSTRIES

25 Whaley Avenue, PO Box 310
Milverton, ON CANADA N0K 1M0
Tel: 800-561-3164

VISIT US ONLINE AT BOSHART.COM

For more information on installation, adjustment, repair & operation, visit Boshart Knowledge Base at SUPPORT.BOSHART.COM

© 2026 Boshart Industries Inc. All Rights Reserved.

14-(G)CB SERIES CARBON BLOCK TASTE AND ODOUR CARTRIDGE

APPLICATION:
- Activated Carbon made from 100% premium coconut shell
- Designed to remove unpleasant tastes and odours as well as chlorine taste and odour from potable drinking water
- High chlorine reduction, substantial dirt holding capacity, and greatly reduced carbon fines
- Great alternative to traditional granular activated carbon where high chlorine reduction is needed
- Suitable for residential, commercial and industrial applications
- Excellent polishing filters, or pre-filters in applications requiring fine filtration and high capacity
- Enhanced dirt holding capacity
- Reduces particles as small as 0.5 micron in size by mechanical means



WARNING: Always Test Water - Never use sediment/ taste and odour cartridges with water that is microbiologically unsafe or of unknown quality without adequate disinfection before or after the filtration system. These cartridges will not remove harmful contaminants/ bacteria. An NSF 53 certified water filter has been independently tested and certified by NSF International (or another accredited organization like the Water Quality Association) to reduce specific health-related contaminants rather than just aesthetic traits like taste or odour

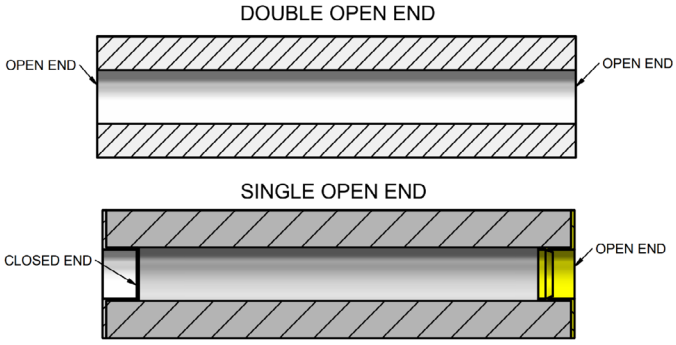

FEATURES/SPECIFICATIONS:
- Construction: Diagonally wound natural cotton fibers
- Designed to seal on a knife seat to prevent bypass
- Cartridges are compatible with the majority of brands of filter housings using double open end (DOE) **CAUTION:** Standard size cartridges are not compatible with Rainfresh Single Open End (SOE), however the giants are compatible with Rainfresh Double Open End (DOE) cartridges
- Efficiency:

CERTIFICATION:
- NSF/ANSI/CAN 42 - Drinking Water Treatment Units - Aesthetic Effects

*Covers Point-of-Use and Point-of-Entry (POU / POE) systems designed to reduce specific aesthetic, or non-health effects contaminants (chlorine, TDS, particulates) that may be found in drinking water that is considered to be microbiologically safe.

RATINGS:
- Temperature Rating: 40°F to 100°F (4°C to 38°C)
- Max Pressure Rating: 120 PSI

SHELF LIFE / STORAGE:
- Carbon cartridges contain activated carbon media designed to reduce taste, odour and certain contaminants. Exposure to moisture, humidity and airborne chemicals or odours during storage may affect the condition or absorption performance of the carbon media. Supplier specified shelf life is 2 years
- Unused filter cartridges should be stored in their original, unopened packaging until ready for installation. For -2PK part number cartridges, once the package has been opened, the remaining unused cartridge should be wrapped in plastic wrap or in a sealed bag to prevent exposure to moisture, dust and environmental contaminants

BOSHART INDUSTRIES
25 Whaley Avenue, PO Box 310
Milverton, ON CANADA N0K 1M0
Tel: 800-561-3164
VISIT US ONLINE AT BOSHART.COM

For more information on installation, adjustment, repair & operation, visit Boshart Knowledge Base at
SUPPORT.BOSHART.COM

© 2026 Boshart Industries Inc. All Rights Reserved.

MATERIAL LIST		
No.	**Item**	**Material**
1	Top Gasket	Santoprene
2	Top End Cap	Polypropylene
2	Inner/Outer Wrap	Polyolefin
4	Filter Media	Bonded PAC
5	Netting	Polyethylene
6	Bottom End Cap	Polypropylene
7	Bottom Gasket	Santoprene

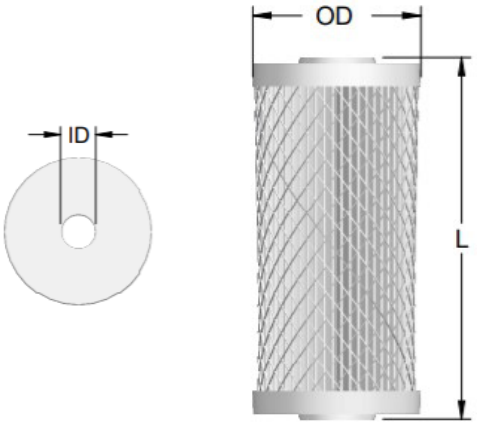

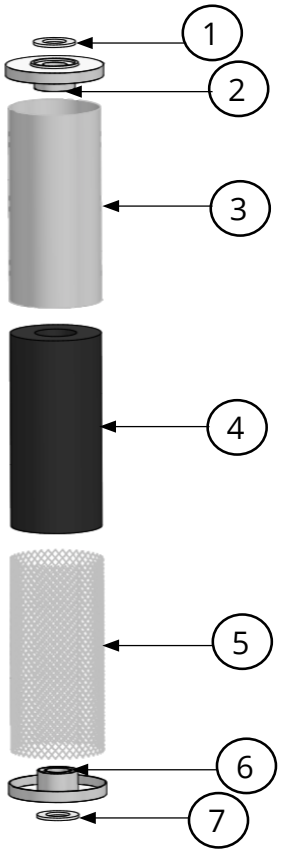

DIMENSIONS											
Part No.	**Flow Rate PSI Drop @ GPM**	**Micron Rating**	**Chlorine Capacity**	**Inner Diameter (ID)**		**Outer Diameter (OD)**		**Length (L)**		**Weight**	
				in	**mm**	**in**	**mm**	**in**	**mm**	**lbs**	**grams**
STANDARD, NOMINAL SIZE 2-1/2" X 5"											
14-CB478-05	1.2 PSI @ 1 GPM	5	2,112 @ 1 GPM	1.10	28.00	2.81	71.50	4.90	124.5	0.49	220
STANDARD, NOMINAL SIZE 2-1/2" X 10"											
14-CB1-05	1 PSI @ 1 GPM	5	3,969 @ 1 GPM	1.10	28.00	2.81	71.50	9.84	250.0	1.32	600
14-CB1-10	1 PSI @ 1 GPM	10	3,969 @ 1 GPM	1.10	28.00	2.81	71.50	9.84	250.0	1.32	600
STANDARD, NOMINAL SIZE 2-1/2" X 20"											
14-CB2-05	1.2 PSI @ 1 GPM	5	5,808 @ 1 GPM	1.10	28.00	2.81	71.50	20.00	508.0	1.65	750
14-CB2-10	1.2 PSI @ 1 GPM	10	5,808 @ 1 GPM	1.10	28.00	2.81	71.50	20.00	508.0	1.65	750
GIANT, NOMINAL SIZE 4-1/2" X 10"											
14-GCB1-10	1.3 PSI @ 3 GPM	10	10,560 @ 1 GPM	1.10	28.00	4.65	118.0	9.84	250.0	2.58	1170
GIANT, NOMINAL SIZE 4-1/2" X 20"											
14-GCB2-10	2.7 PSI @ 5 GPM	10	21,648 @ 1 GPM	1.10	28.00	4.65	118.0	20.00	508.0	5.89	2670

BOSHART INDUSTRIES
25 Whaley Avenue, PO Box 310
Milverton, ON CANADA N0K 1M0
Tel: 800-561-3164
VISIT US ONLINE AT BOSHART.COM

For more information on installation, adjustment, repair & operation, visit Boshart Knowledge Base at SUPPORT.BOSHART.COM

© 2026 Boshart Industries Inc. All Rights Reserved.

14-(G)CCR SERIES CARBON BRIQUETTE 'CYST REMOVAL' FILTER CARTRIDGE

APPLICATIONS:
- Reduces chlorine, taste and Odour
- Suitable for reduction of cysts
- Excellent polishing filter
- Ideal for potable water in residential, industrial, commercial and food service applications
- Point-of-Entry (POE) and Point-of-Use (POU) filtration
- Polishing filtration for fine filtration applications

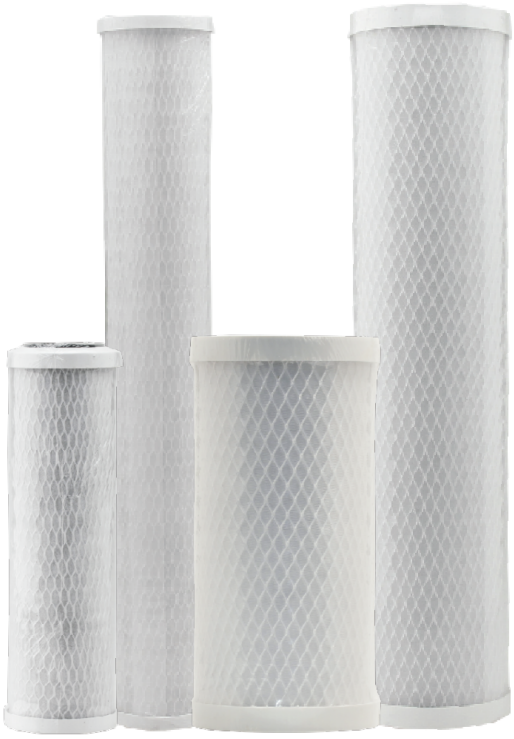

WARNING: Always Test Water - Never use sediment/ taste and odour cartridges with water that is microbiologically unsafe or of unknown quality without adequate disinfection before or after the filtration system. These cartridges will not remove harmful contaminants/ bacteria. An NSF 53 certified water filter has been independently tested and certified by NSF International (or another accredited organization like the Water Quality Association) to reduce specific health-related contaminants rather than just aesthetic traits like taste or odour

FEATURES/SPECIFICATIONS:
- Reduces particles as small as 0.5 micron in size by mechanical means
- Enhances dirt-holding capacity
- Premium high capacity bad taste, odour and chlorine reduction
- Designed to seal on a knife seat to prevent bypass
- Cartridges are compatible with the majority of brands of filter housings using double open end (DOE) **CAUTION:** Standard size cartridges are not compatible with Rainfresh Single Open End (SOE), however the giants are compatible with Rainfresh Double Open End (DOE) cartridges
- Micron ratings based on 85% or greater removal of given particle size
- Cartridges are capable of reducing 99.9% of Cryptosporidium and Giardia cysts

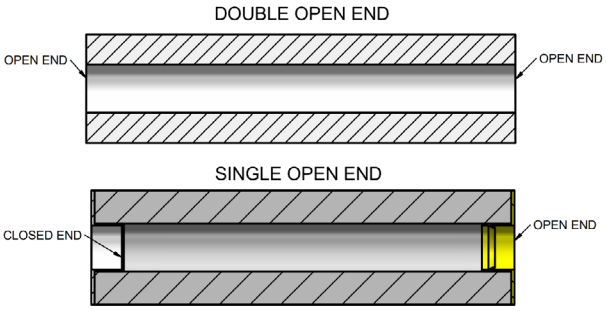

CERTIFICATIONS:
- NSF/ANSI 42 - Drinking Water Treatment Units - Aesthetic Effects

*Covers Point-of-Use and Point-of-Entry (POU / POE) systems designed to reduce specific aesthetic, or non-health effects contaminants (chlorine, TDS, particulates) that may be found in drinking water that is considered to be microbiologically safe.

RATINGS:
- Max Temperature Rating: 40°F to 180°F (4.4°C to 88.2°C)

SHELF LIFE / STORAGE:
- Carbon cartridges contain activated carbon media designed to reduce taste, odour and certain contaminants. Exposure to moisture, humidity and airborne chemicals or odours during storage may affect the condition or absorption performance of the carbon media. Supplier specified shelf life is 2 years
- Unused filter cartridges should be stored in their original, unopened packaging until ready for installation. For -2PK part number cartridges, once the package has been opened, the remaining unused cartridge should be wrapped in plastic wrap or in a sealed bag to prevent exposure to moisture, dust and environmental contaminants

BOSHART INDUSTRIES
25 Whaley Avenue, PO Box 310
Milverton, ON CANADA N0K 1M0
Tel: 800-561-3164
VISIT US ONLINE AT BOSHART.COM

For more information on installation, adjustment, repair & operation, visit Boshart Knowledge Base at SUPPORT.BOSHART.COM

© 2026 Boshart Industries Inc. All Rights Reserved.

MATERIAL LIST		
No.	**Item**	**Material**
1	Top Gasket	Santoprene
2	Top End Cap	Polypropylene
3	Outer Wrap	Polyolefin
4	Filter Media	Bonded PAC
5	Netting	Polyethylene
6	Bottom End Cap	Polypropylene
7	Bottom Gasket	Santoprene

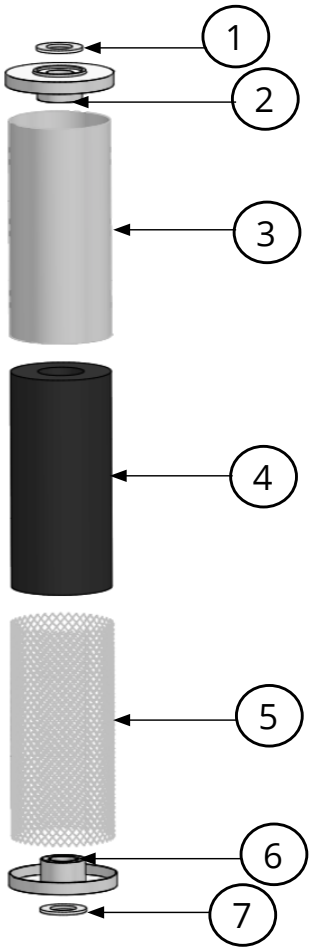

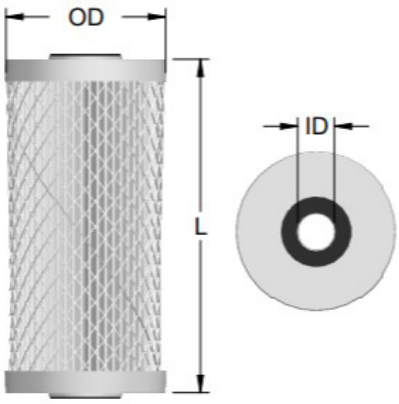

DIMENSIONS											
Part No.	**Flow Rate PSI Drop @ GPM**	**Micron Rating**	**Chlorine Capacity***	**Inside Diameter (I.D.)**		**Outside Diameter (O.D.)**		**Length (L)**		**Weight**	
				in	**mm**	**in**	**mm**	**in**	**mm**	**lbs**	**grams**
STANDARD, NOMINAL SIZE 2-3/4" x 10"											
14-CCR1-0.5	<20 PSI @ 1 GPM	0.5	>20,000 Gal. @ 1 GPM	1.00	25.40	2.88	73.15	9.75	247.65	1.17	529
STANDARD, NOMINAL SIZE 2-3/4" x 20"											
14-CCR2-0.5	17 PSI @ 2 GPM	0.5	>45,000 Gal. @ 2 GPM	1.00	25.40	2.88	73.15	20.00	508.00	1.25	567
GIANT, NOMINAL SIZE 4-1/2" x 10"											
14-GCCR1-0.5	20 PSI @ 2 GPM	0.5	>50,000 Gal. @ 2 GPM	1.00	25.40	4.63	117.48	9.75	247.65	3.13	1418
GIANT, NOMINAL SIZE 4-1/2" x 20"											
14-GCCR2-0.5	19 PSI @ 4 GPM	0.5	>150,000 Gal. @ 4 GPM	1.00	25.40	4.63	117.48	20.00	508.00	7.00	3175

*Based on manufacturer's internal testing.

BOSHART INDUSTRIES

25 Whaley Avenue, PO Box 310
Milverton, ON CANADA N0K 1M0
Tel: 800-561-3164

VISIT US ONLINE AT BOSHART.COM

For more information on installation, adjustment, repair & operation, visit Boshart Knowledge Base at SUPPORT.BOSHART.COM

© 2026 Boshart Industries Inc. All Rights Reserved.

BII-14-(G)CCR-0726(4129) V2

14-(G)GAC SERIES GRANULAR ACTIVATED CARBON TASTE & ODOUR CARTRIDGE



APPLICATIONS:

- Activated Carbon made from 100% premium coconut shell
- Capable of removing small amounts of sediment
- Suitable for residential, commercial and industrial applications
- Suitable for reverse osmosis system or Poin-of-Use (POU) water dispensing system

WARNING: Always Test Water - Never use sediment/ taste and odour cartridges with water that is microbiologically unsafe or of unknown quality without adequate disinfection before or after the filtration system. These cartridges will not remove harmful contaminants/ bacteria. An NSF 53 certified water filter has been independently tested and certified by NSF International (or another accredited organization like the Water Quality Association) to reduce specific health-related contaminants rather than just aesthetic traits like taste or odour

FEATURES/SPECIFICATIONS:

- Canister design ensures maximum carbon contact time for removal of unpleasant taste and odour
- Low pressure drop and steady flow rates
- Integral post filter to remove small carbon fines and other sediment
- Polyether cushion to absorb against watter hammer spikes
- Designed to seal on a knife seat to prevent bypass
- Cartridges are compatible with the majority of brands of filter housings using double open end (DOE) **CAUTION:** Standard size cartridges are not compatible with Rainfresh Single Open End (SOE), however the giants are compatible with Rainfresh Double Open End (DOE) cartridges
- Efficiency:

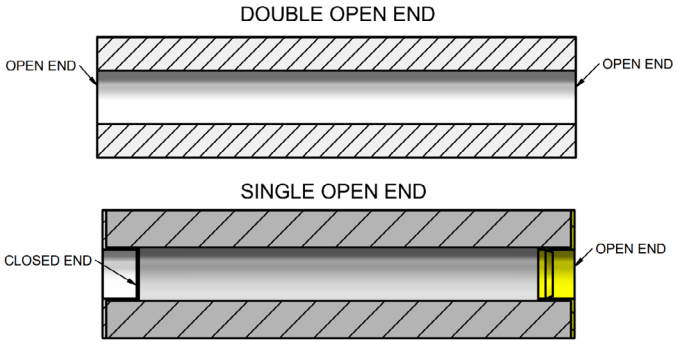

CERTIFICATIONS:

- NSF/ANSI/CAN 42 - Drinking Water Treatment Units - Aesthetic Effects

*Covers Point-of-Use and Point-of-Entry (POU / POE) systems designed to reduce specific aesthetic, or non-health effects contaminants (chlorine, TDS, particulates) that may be found in drinking water that is considered to be microbiologically safe.

RATINGS:

- Operating Pressure: 10-120 PSI (0.7-8.2 bar)
- Operating Temperature: 35°F to 130°F (2°C to 55°C)

SHELF LIFE / STORAGE:

- Carbon cartridges contain activated carbon media designed to reduce taste, odour and certain contaminants. Exposure to moisture, humidity and airborne chemicals or odours during storage may affect the condition or absorption performance of the carbon media. Supplier specified shelf life is 2 years
- Unused filter cartridges should be stored in their original, unopened packaging until ready for installation. For -2PK part number cartridges, once the package has been opened, the remaining unused cartridge should be wrapped in plastic wrap or in a sealed bag to prevent exposure to moisture, dust and environmental contaminants

BOSHART INDUSTRIES
25 Whaley Avenue, PO Box 310
Milverton, ON CANADA N0K 1M0
Tel: 800-561-3164
VISIT US ONLINE AT BOSHART.COM

For more information on installation, adjustment, repair & operation, visit Boshart Knowledge Base at
SUPPORT.BOSHART.COM

© 2026 Boshart Industries Inc. All Rights Reserved.

MATERIAL LIST		
No.	**Item**	**Material**
1	Gasket	NBR (Nitrile Butadiene Rubber)
2	Top End Cap	Polypropylene
3	5 Micron Post Filter	Spun Polypropylene
4	Filter Media	Granular (Loose) Activated Coconut Shell Carbon
5	Filter Cartridge Shell	Polypropylene
6	20 Micron Cushion	Polyether Foam
7	Pre Filter Pad	Spun Polypropylene
8	Bottom End Cap	Polypropylene

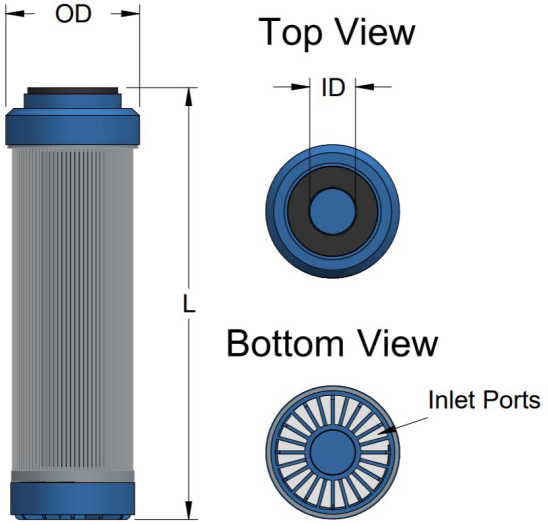

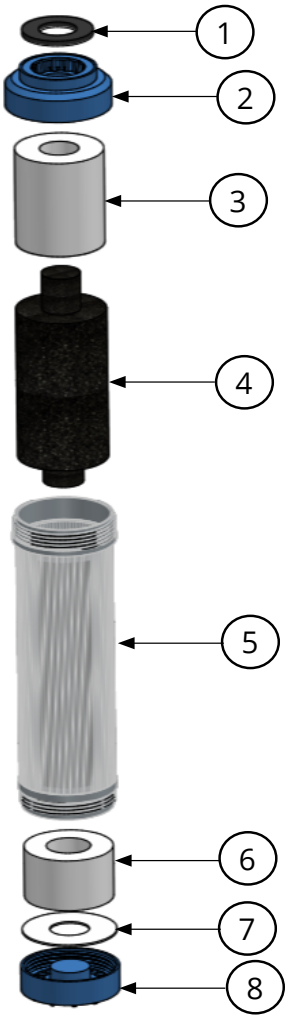

DIMENSIONS											
Part No.	**Flow Rate PSI Drop @ GPM**	**Micron Rating**	**Service Lifespan**	**Inner Diameter (I.D.)**		**Outer Diameter (O.D.)**		**Length (L)**		**Weight**	
				in	**mm**	**in**	**mm**	**in**	**mm**	**lbs**	**grams**
STANDARD, NOMINAL SIZE 2-1/2" x 10"											
14-GAC1-05	5 PSI @ 1 GPM	5	4,000 Liters @ 80% Chlorine Reduction Rate	1.00	25.40	2.99	76.00	9.84	250.00	0.08	35
STANDARD, NOMINAL SIZE 2-1/2" x 20"											
14-GAC2-05	10 PSI @ 2 GPM	5	10,000 Liters @ 80% Chlorine Reduction Rate	1.00	25.40	2.99	76.00	20.00	508.00	1.96	870
GIANT, NOMINAL SIZE 4-1/2" x 10"											
14-GGAC1-05	10 PSI @ 2.5 GPM	5	10,000 Liters @ 80% Chlorine Reduction Rate	1.00	25.40	4.45	113.00	9.84	250.00	2.20	998
GIANT, NOMINAL SIZE 4-1/2" x 20"											
14-GGAC2-05	10 PSI @ 2.5 GPM	5	20,000 Liters @ 80% Chlorine Reduction Rate	1.00	25.40	4.45	113.00	20.00	508.00	4.88	2215

* Life span capacity is tested based on 2 ppm chlorine influent with 80% reduction as life definition and 50% reduction by NSF42 7.3.3. All followed by the test standard NSF42 7.3.3.
* The result of service lifespan and pressure drop could be varied in field.

BOSHART INDUSTRIES
25 Whaley Avenue, PO Box 310
Milverton, ON CANADA N0K 1M0
Tel: 800-561-3164
VISIT US ONLINE AT BOSHART.COM

For more information on installation, adjustment, repair & operation, visit Boshart Knowledge Base at
SUPPORT.BOSHART.COM

© 2026 Boshart Industries Inc. All Rights Reserved.

14-(G)CW SERIES POWDER ACTIVATED CARBON WRAP TASTE AND ODOUR CARTRIDGE



APPLICATIONS:
- Suitable for residential chlorinated water supplies
- Point of use (POU) water filtration
- Applications requiring combined carbon and sediment filtration

WARNING: Always Test Water - Never use sediment/ taste and odour cartridges with water that is microbiologically unsafe or of unknown quality without adequate disinfection before or after the filtration system. These cartridges will not remove harmful contaminants/ bacteria. An NSF 53 certified water filter has been independently tested and certified by NSF International (or another accredited organization like the Water Quality Association) to reduce specific health-related contaminants rather than just aesthetic traits like taste or odour

FEATURES/SPECIFICATIONS:
- Dual purpose carbon and sediment filtration
- Both chlorine and sediment reduction
- High flow rates possible due to low initial pressure drop
- Good dirt holding capacity
- General purpose taste and odour reduction for residential chlorinated water supplies
- Polishing filter for process or closed-loop streams
- Designed to seal on a knife seat to prevent bypass
- Cartridges are compatible with the majority of brands of filter housings using double open end (DOE) **CAUTION:** Standard size cartridges are not compatible with Rainfresh Single Open End (SOE), however the giants are compatible with Rainfresh Double Open End (DOE) cartridges
- Efficiency unknown

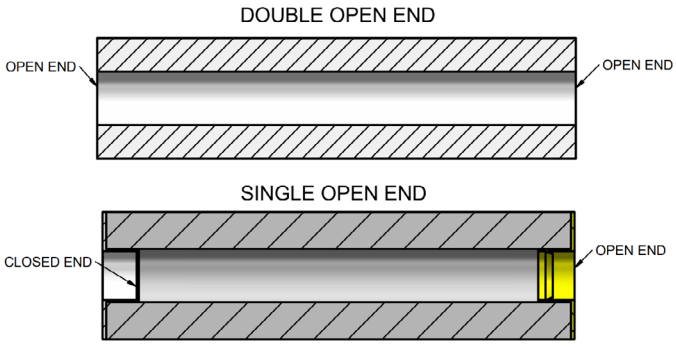

CERTIFICATIONS:
- NSF/ANSI/CAN 42 - Drinking Water Treatment Units - Aesthetic Effects

*Covers Point-of-Use and Point-of-Entry (POU / POE) systems designed to reduce specific aesthetic, or non-health effects contaminants (chlorine, TDS, particulates) that may be found in drinking water that is considered to be microbiologically safe.

RATINGS:
- Temperature Rating: 40°F to 125°F (4°C to 52°C)

SHELF LIFE / STORAGE:
- Carbon cartridges contain activated carbon media designed to reduce taste, odour and certain contaminants. Exposure to moisture, humidity and airborne chemicals or odours during storage may affect the condition or absorption performance of the carbon media. Supplier specified shelf life is 2 years
- Unused filter cartridges should be stored in their original, unopened packaging until ready for installation. For -2PK part number cartridges, once the package has been opened, the remaining unused cartridge should be wrapped in plastic wrap or in a sealed bag to prevent exposure to moisture, dust and environmental contaminants

BOSHART INDUSTRIES
25 Whaley Avenue, PO Box 310
Milverton, ON CANADA N0K 1M0
Tel: 800-561-3164
VISIT US ONLINE AT BOSHART.COM

For more information on installation, adjustment, repair & operation, visit Boshart Knowledge Base at SUPPORT.BOSHART.COM

© 2026 Boshart Industries Inc. All Rights Reserved.

MATERIAL LIST		
No.	**Item**	**Material**
1	Top Gasket	NBR (Nitrile Butadiene Rubber)
2	Top End Cap	Vinyl Plastisol
3	Filter Media	Carbon Impregnated Cellulose
		Plated Carbon Impregnated Polyester (14-GCW1-10 only)
4	Filter Core	Polypropylene
5	Netting	Polyethylene
6	Bottom End Cap	Vinyl Plastisol
7	Bottom Gasket	NBR (Nitrile Butadiene Rubber)

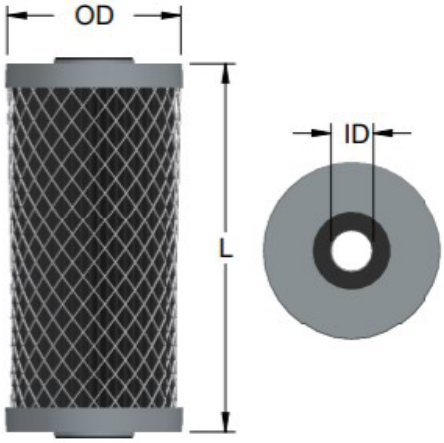

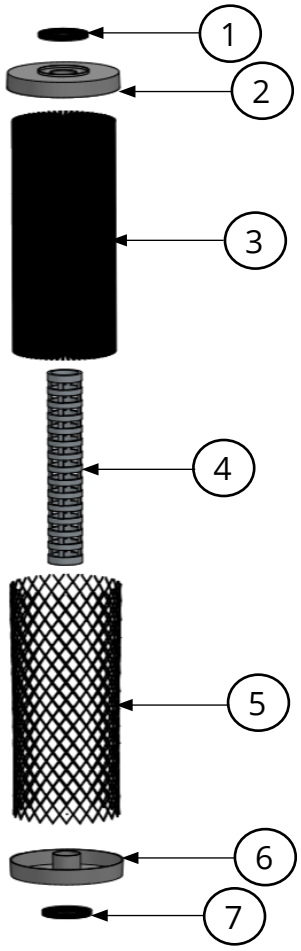

DIMENSIONS												
Part No.	**Initial PSI @ Flow Rate (GPM)**	**Micron Rating**	**Chlorine Capacity**	**Inside Diameter (I.D.)**		**Outside Diameter (O.D.)**		**Length (L)**		**Weight**	
				in	**mm**	**in**	**mm**	**in**	**mm**	**lbs**	**grams**
STANDARD, NOMINAL SIZE 2-1/2” X 5”											
14-CW478-05	2 PSI @ 2 GPM	5	>2,500 gallons @ 0.5 GPM	1.00	25.40	2.50	63.50	4.88	123.95	0.27	123
STANDARD, NOMINAL SIZE 2-3/4” X 10”											
14-CW1-05	4 PSI @ 5 GPM	5	>5,000 gallons @ 1 GPM	1.00	25.40	2.87	73.02	9.75	247.65	0.41	188
STANDARD, NOMINAL SIZE 2-1/2” X 20”											
14-CW2-05	1 PSI @ 5 GPM	5	>10,000 gallons @ 2 GPM	1.00	25.40	2.50	63.50	20.00	508.00	0.86	390
GIANT, NOMINAL SIZE 4-1/2” X 10”											
14-GCW1-05	2 PSI @ 8 GPM	10	500 gallons @ 2 GPM	1.00	25.40	4.50	114.30	9.75	247.65	0.98	444
GIANT, NOMINAL SIZE 4-1/2” X 20”											
14-GCW2-05	2 PSI @ 4 GPM	5	>40,000 gallons @ 4 GPM	1.00	25.40	4.50	114.30	20.00	508.00	3.60	1633

Carbon block cartridges have a consistent pore size. There are no inner and outer micron ratings.

BOSHART INDUSTRIES
25 Whaley Avenue, PO Box 310
Milverton, ON CANADA N0K 1M0
Tel: 800-561-3164
VISIT US ONLINE AT BOSHART.COM

For more information on installation, adjustment, repair & operation, visit Boshart Knowledge Base at SUPPORT.BOSHART.COM

© 2026 Boshart Industries Inc. All Rights Reserved.

14-IM SERIES ICE MAKER/ IN-LINE TASTE AND ODOUR FILTERS



APPLICATIONS:
- Designed to remove unpleasant tastes and odours as well as sediment
- Easy in-line installation and suitable for automatic ice-maker, reverse osmosis, coffee makers, and water dispensers

FEATURES:
- Low pressure drop and steady flow rates
- Integral post filter to remove small carbon fines and other sediment
- All filters are supplied with end caps to prevent dirt or foreign debris from entering the filter



SPECIFICATIONS:
- Filter Media: Coconut Shell Activated Carbon
- Filter Media: Polypropylene Post Filter
- Filter Body: Polypropylene

CERTIFICATIONS:
- NSF/ANSI/CAN 42 - Drinking Water Treatment Units - Aesthetic Effects

*Covers Point-of-Use and Point-of-Entry (POU / POE) systems designed to reduce specific aesthetic, or non-health effects contaminants (chlorine, TDS, particulates) that may be found in drinking water that is cc microbiologically safe.

RATINGS:
- Max Temperature Rating: 40°F to 130°F (4°C to 54°C)
- Max Pressure Rating: 125 PSI

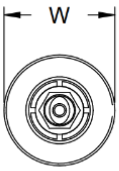





PQC-MA0404

PQC-MA0404 Quick Connect Adapter available to change 14-IM1X10-02QC to threaded ends using 1/4" O.D. Poly Tubing

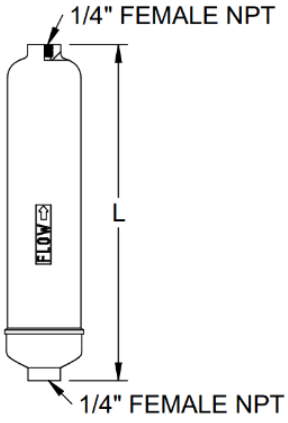

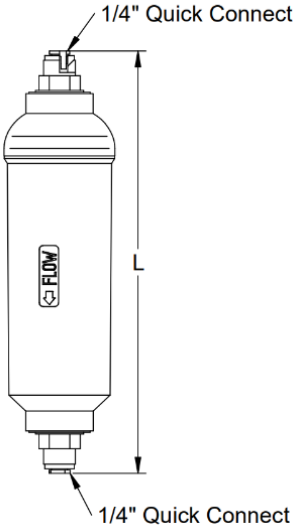

DIMENSIONS

Part No.	Connection	Flow Rate (Liters Per Minute)	Service Life	Outer Diameter (O.D.)		Length (L)		Weight	
				in	mm	in	mm	lbs	grams
14-IM2.5X12-02	1/4" FPT	4 LPM	8,000 Liters @ 80% Chlorine Reduction Rate	2.50	63.50	12.00	304.80	0.88	400
14-IM2X10-02QC	1/4" Quick Connect	2 LPM	8,000 Liters @ 80% Chlorine Reduction Rate	2.00	50.80	10.00	254.00	0.66	300
14-IM2X6-02QC	1/4" Quick Connect	2 LPM	4,500 Liters @ 80% Chlorine Reduction Rate	2.00	50.80	6.00	152.40	0.62	280

BOSHART INDUSTRIES
25 Whaley Avenue, PO Box 310
Milverton, ON CANADA N0K 1M0
Tel: 800-561-3164
VISIT US ONLINE AT BOSHART.COM

For more information on installation, adjustment, repair & operation, visit Boshart Knowledge Base at SUPPORT.BOSHART.COM

© 2026 Boshart Industries Inc. All Rights Reserved.

BII-14-IM-0726(2041) V1

14FHK-S SERIES STANDARD FILTER HOUSING KIT

CAUTION: Protect filter housings from freezing, direct sunlight, and excessive pressure spikes or surges, or exposure to chemicals, especially in under sink installations.



APPLICATIONS:
- Water Well / Municipal Water Supplies (10” & 20”)
- Whole House Point-of-Entry (POE) Residential / Commercial for Sediment Removal (10” & 20”)
- Recreational vehicles (trailers, RV’s) where space is limited (5” or 10”)
- Point-of-Use (POU) At Water Faucet/ Under sink for Taste & Odour Removal (5” & 10”)
- Agriculture - Livestock Watering, Drip Irrigation, Greenhouses, Misting & Fogger Nozzles Water Well Systems (10” & 20”)

FEATURES:
- Filter head comes with air release button on inlet side
- Available with clear or opaque (blue) filter bowl
- Mounting bosses molded in head for installation with mounting bracket
- Housing kit comes complete with filter housing, 1 O-ring installed plus 1 replacement O-ring, mounting bracket & hardware, and filter bowl wrench
- Accepts industry standard filter cartridges (Nominal 2-1/2" to 2-3/4" Diameter x 10" or 20” Long (not included)

SPECIFICATIONS:
- Threads conform to ANSI/ASME B1.20.1 Pipe Threads, General Purpose (Inch)

RATINGS:
- Max Pressure Rating: 125 PSI*

* If working pressure is consistently over 60 PSI, a pressure regulator valve is recommended to extend the lifespan of the bowl.
- Temperature Rating: 40-125°F (4-52°C)

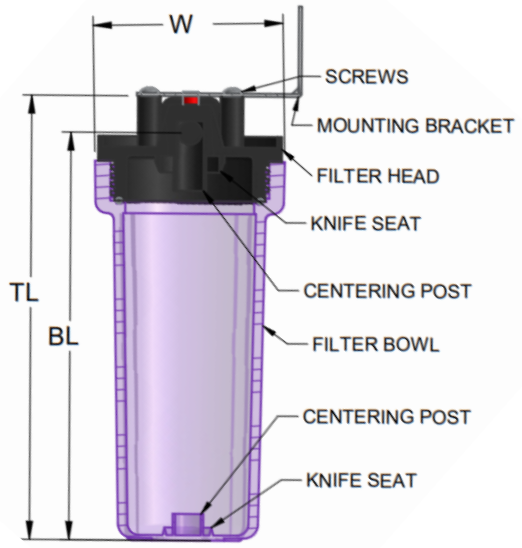

MATERIAL LIST	
Part No.	**Description**
Filter Head	Black Polypropylene
Filter Bowl	C = Clear Styrene-Acrylonitrile (SAN)
	B = Blue Polypropylene
Air Release Button	Stainless Steel, Nitrile Buna Rubber (NBR) & Acrylonitrile Butadiene Styrene (ABS)
O-Ring	Nitrile Buna Rubber (NBR)
Wrench	Acrylonitrile Butadiene Styrene (ABS)
Mounting Bracket	White Powder Coated Steel
Screws	Stainless Steel

DIMENSIONS & SPECIFICATIONS

Part No.	Inlet/ Outlet	Bowl Size	Bowl Colour	Flow Rate Initial PSI @ GPM	W		TL		BL		Weight	
					in	mm	in	mm	in	mm	lbs	grams
14FHK-SB-0503	3/8"	5"	Blue	1 PSI @ 10 GPM*	5.14	130.60	6.85	174.10	6.24	158.50	2.35	1067
14FHK-SB-1007	3/4" FPT	10"	Blue		5.14	130.60	11.81	300.00	10.87	276.00	3.86	1750
14FHK-SC-1007		10"	Clear		5.14	130.60	11.81	300.00	10.87	276.00	4.05	1835
14FHK-SB-2007		20"	Clear		5.14	130.60	21.69	550.80	20.74	526.80	4.96	2250
14FHK-SC-2007		20"	Clear		5.14	130.60	21.69	550.80	20.74	526.80	5.24	2375
14FHK-SC-1007SS**		10"	Clear		5.14	130.60	11.81	300.00	10.87	276.00	4.05	1835

* Actual flow rates and pressure drop will be determined based on cartridge selections and fluid viscosity.
**Filter head comes with 303 stainless steel thread inserts.

BOSHART INDUSTRIES
25 Whaley Avenue, PO Box 310
Milverton, ON CANADA N0K 1M0
Tel: 800-561-3164
VISIT US ONLINE AT BOSHART.COM

For more information on installation, adjustment, repair & operation, visit Boshart Knowledge Base at SUPPORT.BOSHART.COM

© 2026 Boshart Industries Inc. All Rights Reserved.

BII-14FHK-S-0726(2041)

REPLACEMENT PARTS

FILTER HEAD

Part No.	Size
14FHPT-SH-03	3/8" MPT
14FHPT-SH-07	3/4" MPT



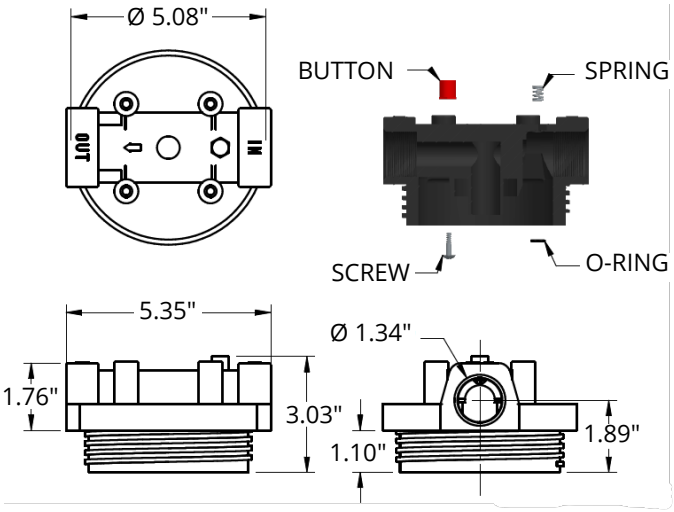

FILTER BOWL

Part No.	DIMENSIONS					
	H		W		TW	
	in	mm	in	mm	in	mm
14FHPT-SB-05B	5.51	139.95	4.55	115.57	3.64	92.46
14FHPT-SB-10C	10.45	265.43	5.25	133.35	4.20	106.68
14FHPT-SB-10B						
14FHPT-SB-20C	20.60	20.60	5.25	133.35	4.20	106.68
14SHPT-SB-20B						

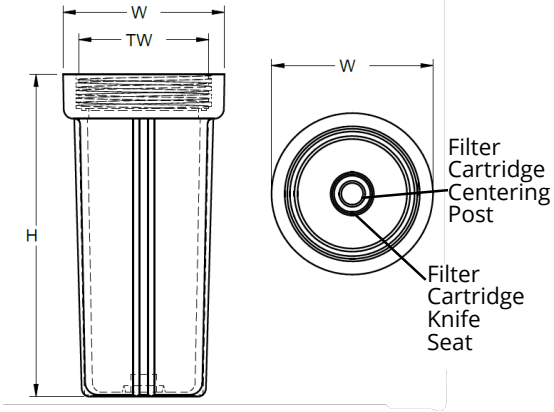



O-RING KIT

Part No.	Fits Housing Size	O-Ring Standard Size	Replacement O-Ring I.D. x C.S.	
			in	mm
14FHPT-SLOR-5	5" Bowls	AS568-237	3.359 x 0.139	85.32 x 3.53
14FHPT-SOR	10" & 20" Bowls	AS568-240	3.734 x 0.139	94.84 x 3.53

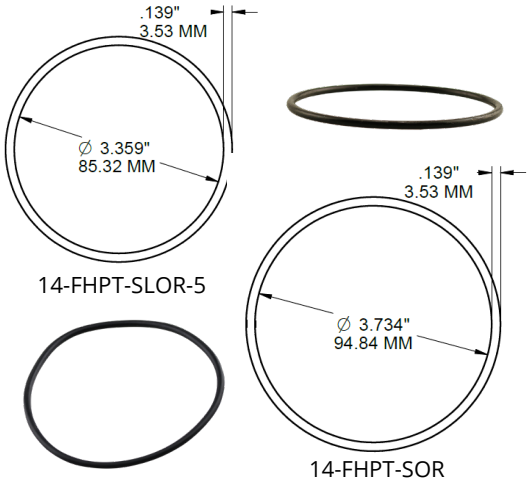

BOSHART INDUSTRIES

25 Whaley Avenue, PO Box 310
Milverton, ON CANADA N0K 1M0
Tel: 800-561-3164

VISIT US ONLINE AT BOSHART.COM

For more information on installation, adjustment, repair & operation, visit Boshart Knowledge Base at SUPPORT.BOSHART.COM

© 2026 Boshart Industries Inc. All Rights Reserved.

BII-14FHK-S-0726(2041)

FILTER WRENCH

Part No.	Fits Housing Size
14FHPT-SFW	All standard housings



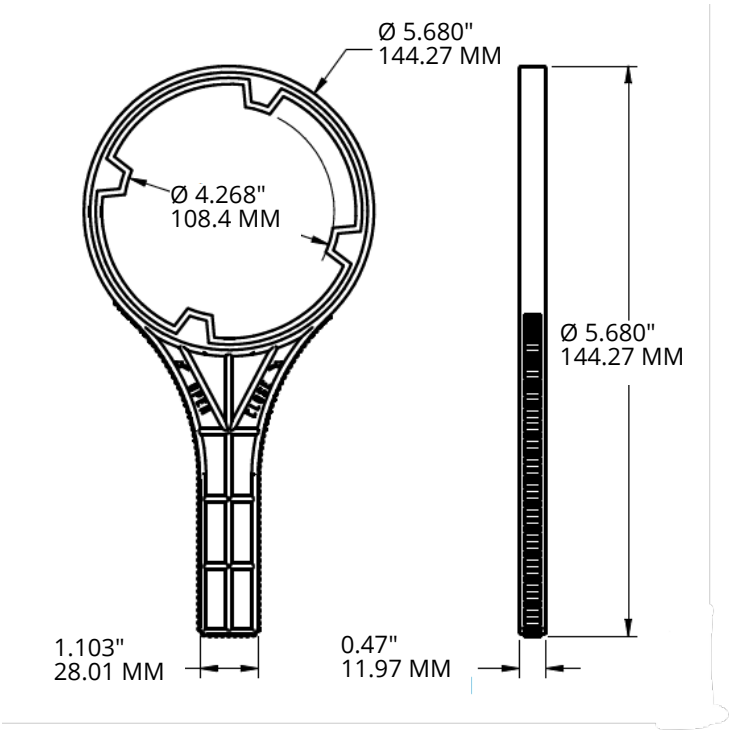

MOUNTING BRACKET KIT

Part No.	Fits Housing Size
14FHPT-SMB	For all standard housings



NOTE: Never use a longer screw as there is a risk of puncturing the filter head

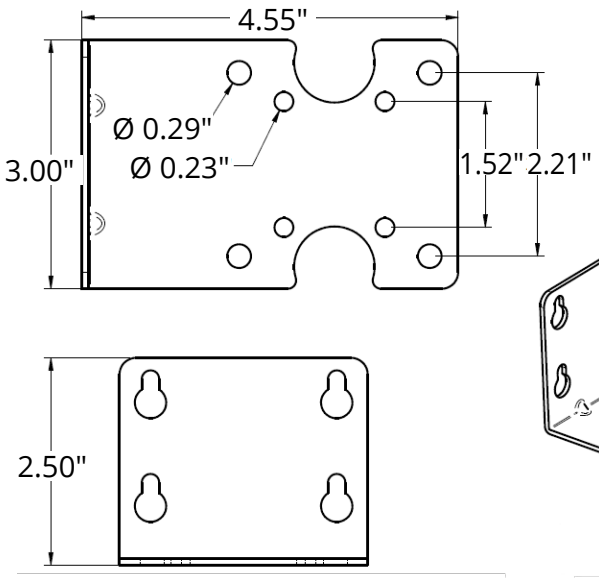

No. 14 Phillips Rounded Head Screw

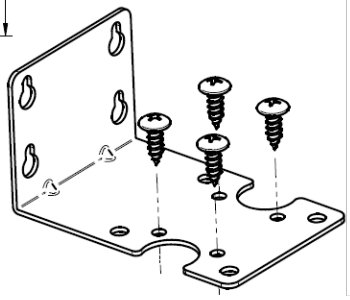

BOSHART INDUSTRIES
25 Whaley Avenue, PO Box 310
Milverton, ON CANADA N0K 1M0
Tel: 800-561-3164

VISIT US ONLINE AT BOSHART.COM

For more information on installation, adjustment, repair & operation, visit Boshart Knowledge Base at
SUPPORT.BOSHART.COM

© 2026 Boshart Industries Inc. All Rights Reserved.

FILTER CARTRIDGE COMPATIBILITY:

Cartridge Series Number	Cartridge Type	Fits Housing Type	Nominal Size	Actual Size
14-CB478-05	5" Standard Carbon Block	Fits 5" Standard Housing	2-1/2" x 5"	2-1/2" x 4-7/8"
14-PPE1-XX	10" Standard Pleated Polyester	Fits 10" Standard & Slim Line Housings	2-1/2" x 10"	2-1/2" x 9-3/4"
14-SP1-XX	10" Standard Spun Polypropylene		2-1/2" x 10"	2-1/2" x 9-7/8"
14-SWP1-XX	10" Standard String Wound Polypropylene		2-1/2" x 10"	2-1/2" x 9-7/8"
14-CB1-XX	10" Carbon Block		2-3/4" x 10"	2-3/4" x 9-3/4"
14-CCR1-0.5	10" Carbon Briquette Cyst Removal		2-3/4" x 10"	2-3/4" x 9-3/4"
14-CW1-05	10" Standard Carbon Wrap		2-1/2" x 10"	2-1/2" x 9-3/4"
14-GAC1-05	10" Standard Granular Activated Carbon		2-3/4" x 10"	2-3/4" x 9-3/4"
14-PPE2-XX	20" Standard Pleated Polyester	Fits 20" Standard & Slim Line Housings	2-1/2" x 20"	2-1/2" x 20"
14-SP2-XX	20" Standard Spun Polypropylene		2-1/2" x 20"	2-1/2" x 20"
14-SWP2-XX	20" Standard String Wound Polypropylene		2-1/2" x 20"	2-1/2" x 20"
14-CB2-XX	20" Carbon Block		2-3/4" x 20"	2-3/4" x 20"
14-CCR2-0.5	20" Carbon Briquette Cyst Removal		2-3/4" x 20"	2-3/4" x 20"
14-CW2-05	20" Standard Carbon Wrap		2-1/2" x 20"	2-1/2" x 20"
14-GAC2-XX	20" Standard Granular Activated Carbon		2-3/4" x 20"	2-3/4" x 20"

Filter Cartridge Lengths (9-3/4" vs. 9-7/8")

Nominal 10" filter housings are designed to accept 9-3/4" cartridges, which match the distance between the top and bottom sealing (knife) seats. These cartridges use rigid end caps or gaskets that compress against the housing to create a tight seal and prevent bypass.

9-7/8" cartridges are used only for string wound and spun polypropylene (depth) filters. These cartridges are intentionally made slightly longer (+1/8") because their softer media allows the housing's knife edges to embed into the filter ends. This compression ensures a proper seal and prevents bypass—an issue that can occur if these softer cartridges are only 9-3/4" long.

Rigid cartridge types cannot be manufactured at 9-7/8", as the extra length would prevent proper housing closure and O-ring sealing.

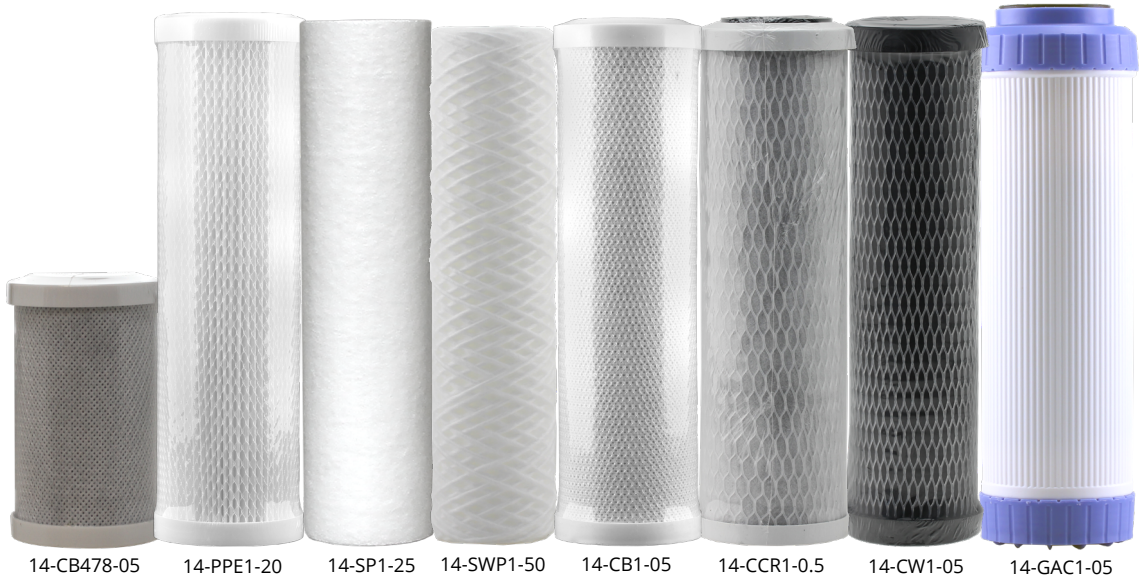

20" Nominal Filter Cartridge Lengths (20" vs. 20-1/8" Actual)

14-SP2-XX, 14-SWP2-XX (20-1/8" Actual)

14-PPE2-XX, 14-CB2-XX, 14-CCR2-XX, 14-GAC2-XX, 14-CW2-XX (20" Actual)

BOSHART INDUSTRIES
25 Whaley Avenue, PO Box 310
Milverton, ON CANADA N0K 1M0
Tel: 800-561-3164

VISIT US ONLINE AT BOSHART.COM

For more information on installation, adjustment, repair & operation, visit Boshart Knowledge Base at SUPPORT.BOSHART.COM

© 2026 Boshart Industries Inc. All Rights Reserved.

BII-14FHK-S-0726(2041)

14FHK-SL SERIES SLIM LINE FILTER HOUSING KIT



CAUTION: Protect filter housings from freezing, direct sunlight, and excessive pressure spikes or surges, or exposure chemicals, especially in under sink installations.

APPLICATIONS:
- Water Well / Municipal Water Supplies (10" & 20")
- Whole House Point-of-Entry (POE) Residential / Commercial for Sediment Removal (10" & 20")
- Recreational vehicles (trailers, RV's) where space is limited (10")
- Point-of-Use (POU) At Water Faucet/ Under sink for Taste & Odour Removal (10")
- Agriculture - Livestock Watering, Drip Irrigation, Greenhouses, Misting & Fogger Nozzles Water Well Systems (10" & 20")

FEATURES:
- Filter head comes with air release button on inlet side
- Available with clear or opaque (blue) filter bowl
- Mounting bosses molded in head for installation with mounting bracket
- Housing kit comes complete with filter housing, 1 O-ring installed plus extra top seat and side seat O-rings, mounting bracket & hardware, and filter bowl wrench
- Accepts industry standard cartridges (Nominal 2-1/2" to 2-3/4" Diameter x 10" or 20 Long - not included)
- Smaller diameter for installation in tight spaces without reducing capacity
- Double O-ring design for ease of sealing

SPECIFICATIONS:
- Threads conform to ANSI/ASME B1.20.1 Pipe Threads, General Purpose (Inch)

CERTIFICATIONS:
- NSF/ANSI 42 - Drinking Water Treatment Units - Aesthetic Effects (Blue Housings)

RATINGS:
- Max Pressure Rating: 125 PSI*

* If working pressure is consistently over 60 PSI, a pressure regulator valve is recommended to protect the filter bowl and all downstream appliances and faucets
- Temperature Rating: 40-125°F (4-52°C)

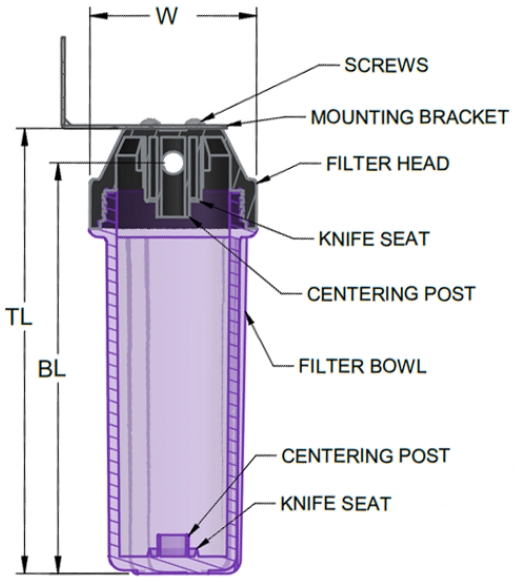

MATERIAL LIST	
Part Name	Material
Filter Head	Black Polypropylene
Filter Bowl	C = Clear Styrene-Acrylonitrile (SAN)
	B = Blue Polypropylene
Air Release Button	Stainless Steel, Nitrile Butadiene Rubber (NBR) & Acrylonitrile Butadiene Styrene (ABS)
O-Rings	Nitrile Buna Rubber (NBR)
Wrench	Acrylonitrile Butadiene Styrene (ABS)
Mounting Bracket	White Powder Coated Steel
Screws	Stainless Steel

DIMENSIONS & SPECIFICATIONS

Part No.	Inlet/ Outlet	Bowl	Flow Rate Initial PSI @ GPM	W		TL		BL		Weight	
				in	mm	in	mm	in	mm	lbs	Grams
14FHK-SLB-1007	3/4" FPT	Blue	1 PSI @ 10 GPM*	4.61	117.00	11.65	296.00	11.02	280.00	3.38	1535.00
14FHK-SLC-1007		Clear		4.61	117.00	11.65	296.00	11.02	280.00	3.53	1600.00
14FHK-SLB-2007		Blue		4.61	117.00	22.33	567.30	21.70	551.30	4.96	2250.00
14FHK-SLC-2007		Clear		4.61	117.00	22.33	567.30	21.70	551.30	5.24	2375.00

* Actual flow rates and pressure drop will be determined based on cartridge selection and fluid viscosity.

BOSHART INDUSTRIES
25 Whaley Avenue, PO Box 310
Milverton, ON CANADA N0K 1M0
Tel: 800-561-3164

VISIT US ONLINE AT BOSHART.COM

For more information on installation, adjustment, repair & operation, visit Boshart Knowledge Base at SUPPORT.BOSHART.COM

© 2026 Boshart Industries Inc. All Rights Reserved.

BII-14FHK-SL-0726(2041)

REPLACEMENT PARTS

FILTER HEAD

Part No.	Size
14FHPT-SLH-07	3/4" FPT



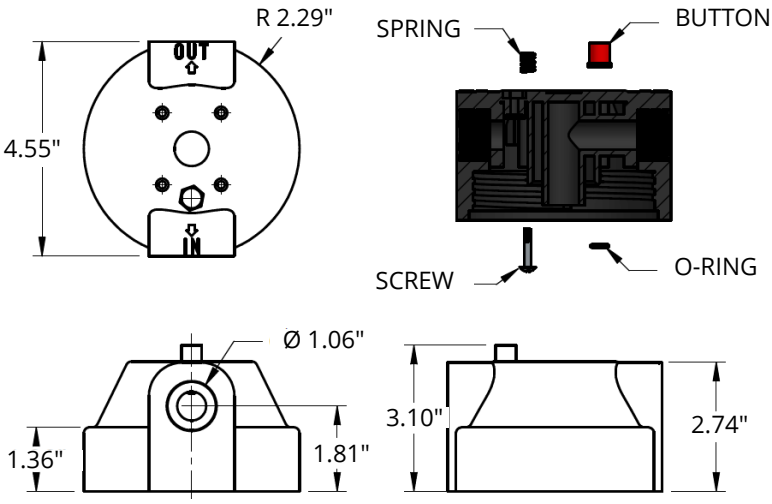

FILTER BOWL

DIMENSIONS						
Part No.	H		W		TW	
	in	mm	in	mm	in	mm
14FHPT-SLB-10B	10.52	267.21	4.64	117.86	3.87	98.30
14FHPT-SLB-10C						
14FHPT-SLB-20B	20.60	523.24	4.64	117.86	3.87	98.30
14FHPT-SLB-20C						

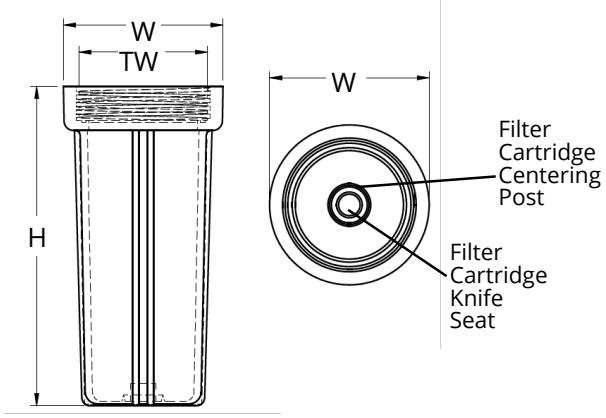



O-RING KIT

Part No.	Standard O-Ring Number	Replacement O-Ring I.D. x C.S	
		in	mm
RP14FH-SLORK-V2041	AS568-237	3.359 x 0.139	85.32 x 3.53

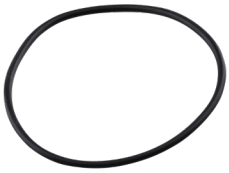

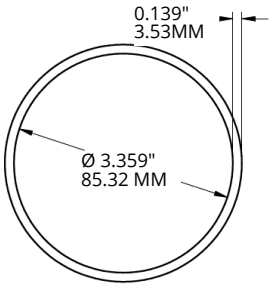

BOSHART INDUSTRIES
25 Whaley Avenue, PO Box 310
Milverton, ON CANADA N0K 1M0
Tel: 800-561-3164
VISIT US ONLINE AT BOSHART.COM

For more information on installation, adjustment, repair & operation, visit Boshart Knowledge Base at SUPPORT.BOSHART.COM

© 2026 Boshart Industries Inc. All Rights Reserved.

FILTER WRENCH

Part No.	Fits Housing Size
14FHPT-SLFW	All slim housings



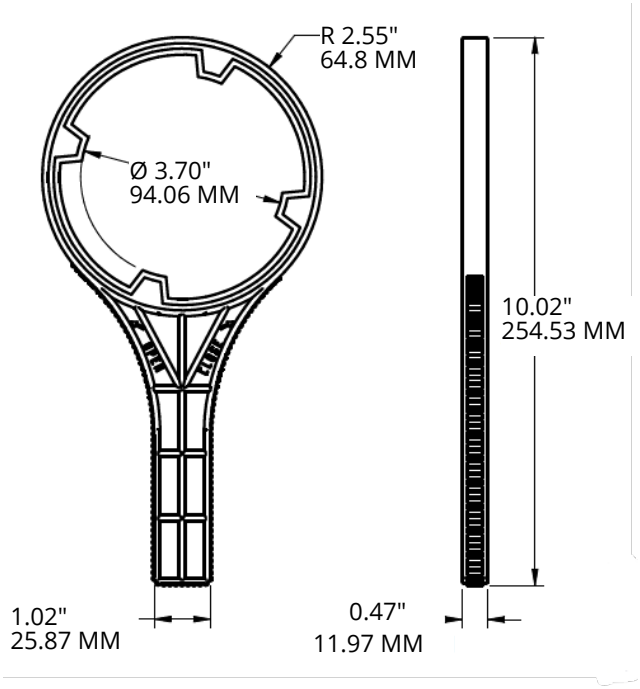

MOUNTING BRACKET KIT

Part No.	Fits Housing Size
14FHPT-SLMB	For all slim housings



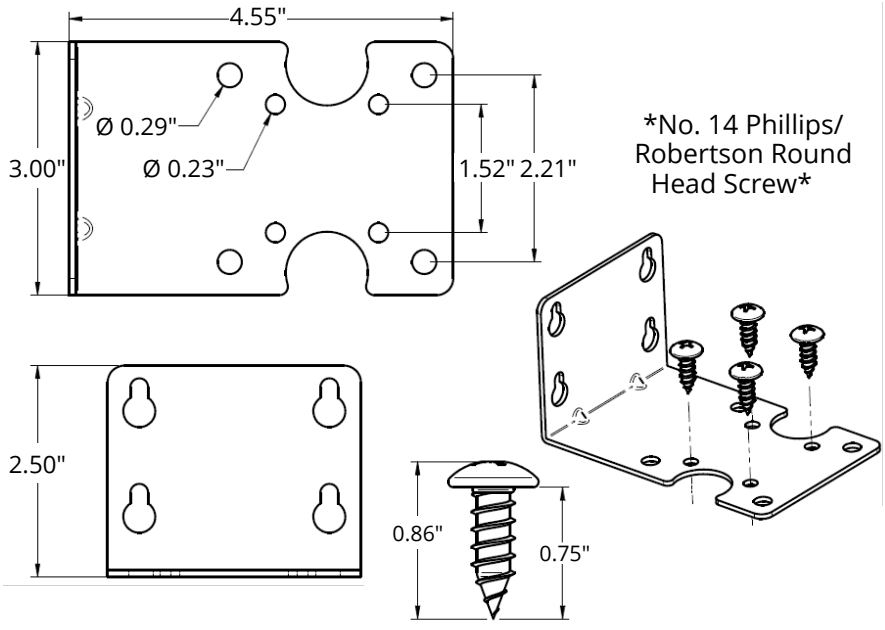

NOTE: Never use a longer screw as there is a risk of puncturing the filter head

BOSHART INDUSTRIES

25 Whaley Avenue, PO Box 310
Milverton, ON CANADA N0K 1M0
Tel: 800-561-3164

VISIT US ONLINE AT BOSHART.COM

For more information on installation, adjustment, repair & operation, visit Boshart Knowledge Base at
SUPPORT.BOSHART.COM

© 2026 Boshart Industries Inc. All Rights Reserved.

FILTER CARTRIDGE COMPATIBILITY:

Cartridge Series Number	Cartridge Type	Fits Housing Type	Nominal Size	Actual Size
14-PPE1-XX	10" Standard Pleated Polyester	Fits 10" Standard & Slim Line Housings	2-1/2" x 10"	2-1/2" x 9-3/4"
14-SP1-XX	10" Standard Spun Polypropylene		2-1/2" x 10"	2-1/2" x 9-7/8"
14-SWP1-XX	10" Standard String Wound Polypropylene		2-1/2" x 10"	2-1/2" x 9-7/8"
14-CB1-XX	10" Carbon Block		2-3/4" x 10"	2-3/4" x 9-3/4"
14-CCR1-0.5	10" Carbon Briquette Cyst Removal		2-3/4" x 10"	2-3/4" x 9-3/4"
14-CW1-05	10" Standard Carbon Wrap		2-1/2" x 10"	2-1/2" x 9-3/4"
14-GAC1-05	10" Standard Granular Activated Carbon		2-3/4" x 10"	2-3/4" x 9-3/4"
14-PPE2-XX	20" Standard Pleated Polyester	Fits 20" Standard & Slim Line Housings	2-1/2" x 20"	2-1/2" x 20"
14-SP2-XX	20" Standard Spun Polypropylene		2-1/2" x 20"	2-1/2" x 20"
14-SWP2-XX	20" Standard String Wound Polypropylene		2-1/2" x 20"	2-1/2" x 20"
14-CB2-XX	20" Carbon Block		2-3/4" x 20"	2-3/4" x 20"
14-CCR2-0.5	20" Carbon Briquette Cyst Removal		2-3/4" x 20"	2-3/4" x 20"
14-CW2-05	20" Standard Carbon Wrap		2-1/2" x 20"	2-1/2" x 20"
14-GAC2-XX	20" Standard Granular Activated Carbon		2-3/4" x 20"	2-3/4" x 20"

10" Nominal Filter Cartridge Lengths (9-3/4" vs. 9-7/8" Actual)

Nominal 10" filter housings are designed to accept 9-3/4" cartridges, which match the distance between the top and bottom sealing (knife) seats. These cartridges use rigid end caps or gaskets that compress against the housing to create a tight seal and prevent bypass.

9-7/8" cartridges are used only for string wound and spun polypropylene (depth) filters. These cartridges are intentionally made slightly longer (+1/8") because their softer media allows the housing's knife edges to embed into the filter ends. This compression ensures a proper seal and prevents bypass—an issue that can occur if these softer cartridges are only 9-3/4" long.

Rigid cartridge types cannot be manufactured at 9-7/8", as the extra length would prevent proper housing closure and O-ring sealing.



14-PPE1-20 14-SP1-25 14-SWP1-50 14-CB1-05 14-CCR1-0.5 14-CW1-05 14-GAC1-05

20" Nominal Filter Cartridge Lengths (20" vs. 20-1/8" Actual)

14-SP2-XX, 14-SWP2-XX (20-1/8" Actual)

14-PPE2-XX, 14-CB2-XX, 14-CCR2-XX, 14-GAC2-XX, 14-CW2-XX (20" Actual)

BOSHART INDUSTRIES
25 Whaley Avenue, PO Box 310
Milverton, ON CANADA N0K 1M0
Tel: 800-561-3164
VISIT US ONLINE AT BOSHART.COM

For more information on installation, adjustment, repair & operation, visit Boshart Knowledge Base at SUPPORT.BOSHART.COM

© 2026 Boshart Industries Inc. All Rights Reserved.

BII-14FHK-SL-0726(2041)

14-FHK-G SERIES GIANT FILTER HOUSING KIT



CAUTION: Protect filter housings from freezing, direct sunlight, and excessive pressure spikes or surges, or exposure to chemicals, especially in under sink installations.

APPLICATIONS:
- Water Well / Municipal Water Supplies (10” & 20”)
- Whole House Point-of-Entry (POE) Residential / Commercial for Sediment Removal (10” & 20”)
- Agriculture - Livestock Watering, Drip Irrigation, Greenhouses, Misting & Fogger Nozzles Water Well Systems (10” & 20”)

FEATURES:
- Filter head comes with pressure relief button on inlet side
- Mounting bosses molded in head for installation with mounting bracket
- Housing kit comes complete with filter housing, 1 O-ring installed plus 1 replacement O-ring, mounting bracket & hardware, and filter bowl wrench
- Accepts industry standard cartridges (Nominal 4-1/2” Diameter x 10” or 20 Long - not included)
- Large capacity suitable for high flow applications

SPECIFICATIONS:
- Threads conform to ANSI/ASME B1.20.1 Pipe Threads, General Purpose (Inch)

CERTIFICATIONS:
- NSF/ANSI 42 - Drinking Water Treatment Units - Aesthetic Effects (Blue Housing Only)

RATINGS:
- Maximum Pressure Rating: 125 PSI

* If working pressure is consistently over 60 PSI, a pressure regulator valve is recommended to extend the lifespan of the bowl.
- Maximum Temperature Rating: 40°F to 100°F (4°C to 38°C)

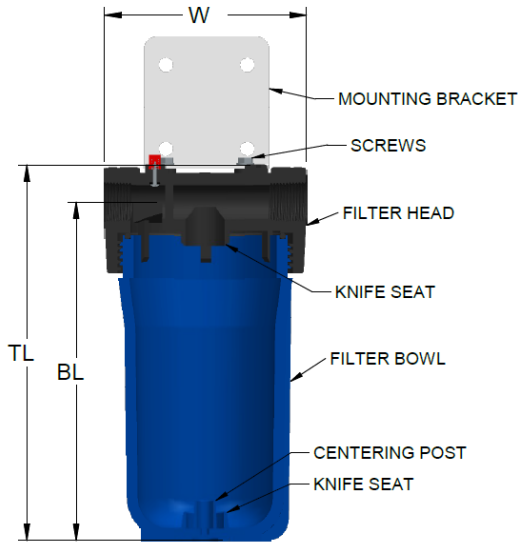

MATERIAL LIST	
Part No.	**Description**
Filter Head	Black Polypropylene
Filter Bowl	C= Clear Polycarbonate
	B= Blue Polypropylene
Air Release	Stainless Steel, Nitrile Butadiene Rubber (NBR) & Acrylonitrile Butadiene Styrene (ABS)
O-Ring	Nitrile Butadiene Rubber (NBR)
Wrench	Acrylonitrile Butadiene Styrene (ABS)
Mounting Bracket	White Powder Coated Steel
Screws	Stainless Steel

DIMENSIONS & SPECIFICATIONS

Part No.	Inlet/ Outlet (FPT)	Bowl Size	Bowl Color	Flow Rate Initial PSI @ GPM	W		TL		BL		Weight	
					in	mm	in	mm	in	mm	lbs	grams
14FHK-GB-1007	3/4"	10"	Blue	1 PSI @ 13GPM*	7.38	187.40	13.51	343.15	12.33	313.15	8.82	4000
14FHK-GC-1007	3/4"		Clear								9.19	4170
14FHK-GB-1010	1"		Blue	1 PSI @ 15GPM*	7.38	187.40	13.51	343.15	12.33	313.15	8.82	4000
14FHK-GC-1010	1"		Clear								9.19	4170
14FHK-GB-1015	1-1/2"		Blue	1 PSI @ 20 GPM*	7.38	187.40	13.51	343.15	12.33	313.16	8.82	4000
14FHK-GC-1015	1-1/2"		Clear								9.19	4170
14FHK-GB-2007	3/4"	20"	Blue	1 PSI @ 13 GPM*	7.38	187.40	23.16	588.30	22.21	564.25	11.40	5170
14FHK-GB-2010	1"		Blue	1 PSI @ 15 GPM*	7.38	187.40	23.16	588.30	22.21	564.25	11.40	5170
14FHK-GC-2010	1"		Clear								12.13	5500
14FHK-GB-2015	1-1/2"		Blue	1 PSI @ 20 GPM*	7.38	187.40	23.16	588.30	22.21	564.25	11.40	5170
14FHK-GC-2015	1-1/2"		Clear								12.13	5500

* Actual flow rates and pressure drop will be determined based on cartridge selection and fluid viscosity.

BOSHART INDUSTRIES
25 Whaley Avenue, PO Box 310
Milverton, ON CANADA N0K 1M0
Tel: 800-561-3164
VISIT US ONLINE AT BOSHART.COM

For more information on installation, adjustment, repair & operation, visit Boshart Knowledge Base at SUPPORT.BOSHART.COM

© 2026 Boshart Industries Inc. All Rights Reserved.

BII-14FHK-G-0726(2041)

REPLACEMENT PARTS:

FILTER HEAD:

Part No.	Size
14FHPT-GH-07	3/4" FPT
14FHPT-GH-10	1" FPT
14FHPT-GH-15	1-1/2" FPT



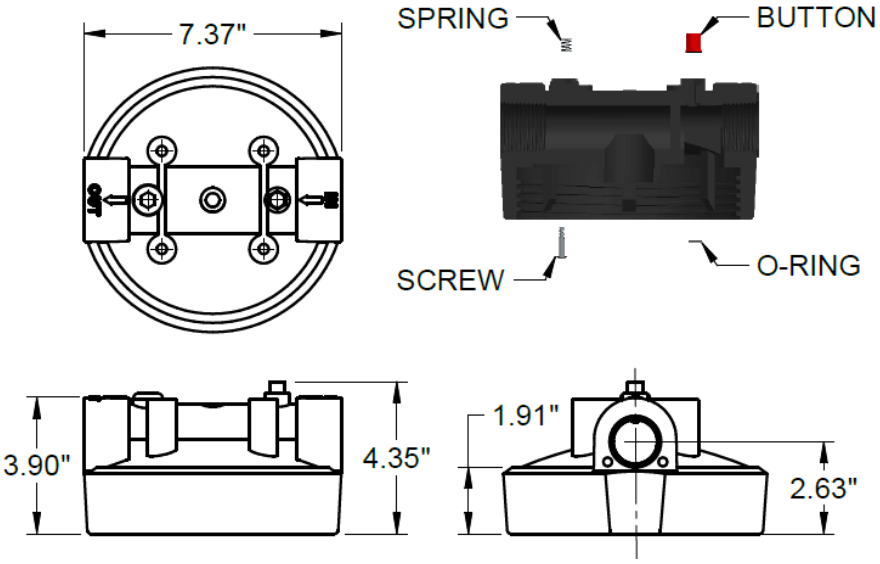

FILTER BOWL:

DIMENSIONS						
Part No.	H		W		TW	
	in	mm	in	mm	in	mm
14FHPT-GB-10C	11.20	284.48	6.30	160.02	6.38	162.05
14FHPT-GB-10B						
14FHPT-GB-20C	21.00	533.40	6.30	160.02	6.38	162.05
14FHPT-GB-20B						

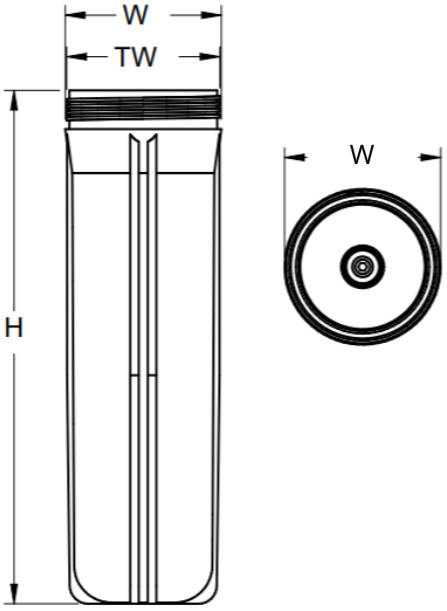



14FHPT-GB-10C 14FHPT-GB-10B 14FHPT-GB-20C 14FHPT-GB-20B

O-RING KIT:

Part No.	Fits Housing Size	O-Ring Standard Size	Replacement O-Ring I.D. x C.S	
			in	mm
14FHPT-GOR	All giant housings	AS568-357	5.475 x 0.210	139.07 x 5.33

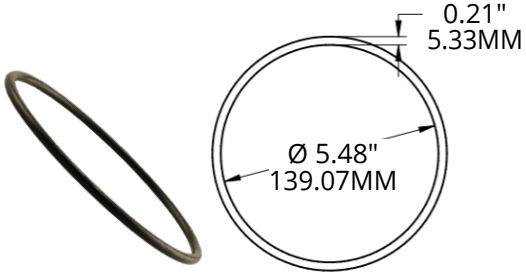

BOSHART INDUSTRIES

25 Whaley Avenue, PO Box 310
Milverton, ON CANADA N0K 1M0
Tel: 800-561-3164

VISIT US ONLINE AT BOSHART.COM

For more information on installation, adjustment, repair & operation, visit Boshart Knowledge Base at SUPPORT.BOSHART.COM

© 2026 Boshart Industries Inc. All Rights Reserved.

FILTER WRENCH:

Part No.	Fits Housing Size
14FHPT-GFW	All giant housings



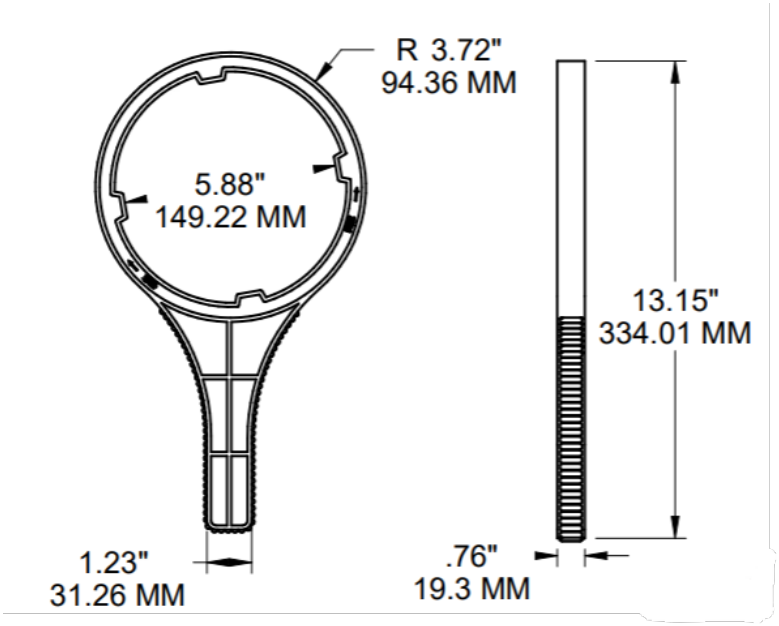

MOUNTING BRACKET KIT:

Part No.	Fits Housing Size
14FHPT-GMB	All giant housings



NOTE: Never use a longer screw as there is a risk of puncturing the filter head

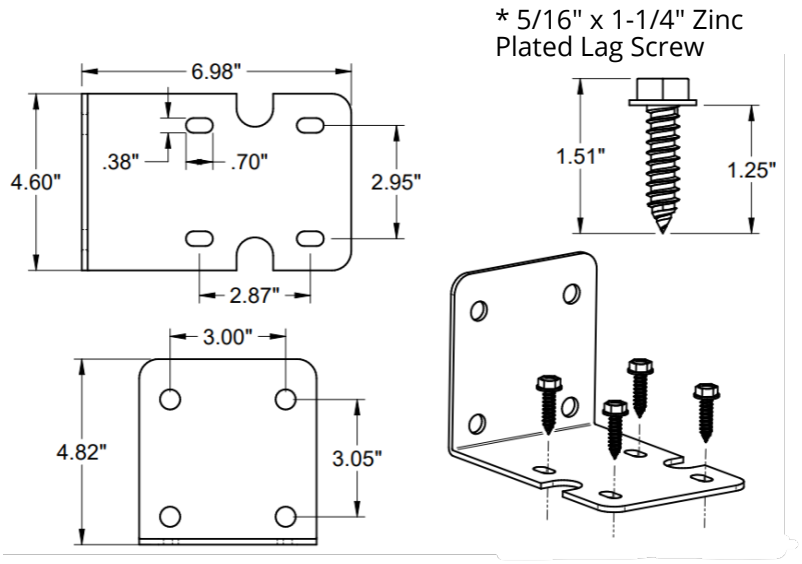

BOSHART INDUSTRIES
25 Whaley Avenue, PO Box 310
Milverton, ON CANADA N0K 1M0
Tel: 800-561-3164
VISIT US ONLINE AT BOSHART.COM

For more information on installation, adjustment, repair & operation, visit Boshart Knowledge Base at SUPPORT.BOSHART.COM

© 2026 Boshart Industries Inc. All Rights Reserved.

FILTER CARTRIDGE COMPATIBILITY:

Cartridge Series Number	Type	Fits Housing Type	Nominal Size	Actual Size
14-GPPE1-XX	10" Giant Pleated Polyester	Fits 10" Giant Housings	4-1/2" x 10"	4-1/2" x 9-3/4"
14-GSP1-XX	10" Giant Spun Polypropylene		4-1/2" x 10"	4-1/2" x 10"
14-GSWP1-XX	10" Giant String Wound Polypropylene		4-1/2" x 10"	4-1/2" x 10"
14-GCB1-10	10" Giant Carbon Block		4-1/2" x 10"	4-1/2" x 9-7/8"
14-GCCR1-0.5	10" Giant Carbon Briquette Cyst Removal		4-1/2" x 10"	4-1/2" x 10"
14-GCW1-05	10" Giant Carbon Wrap		4-1/2" x 10"	4-1/2" x 9-3/4"
14-GGAC1-XX	10" Giant Granular Activated Carbon		4-1/2" x 10"	4-1/2" x 9-7/8"
14-GPPE2-XX	20" Giant Pleated Polyester	Fits 20" Giant Housings	4-1/2" x 20"	4-1/2" x 20"
14-GSP2-XX	20" Giant Spun Polypropylene		4-1/2" x 20"	4-1/2" x 20"
14-GSWP2-XX	20" Giant String Wound Polypropylene		4-1/2" x 20"	4-1/2" x 20"
14-GCB2-10	20" Giant Carbon Block		4-1/2" x 20"	4-1/2" x 20"
14-GCCR2-0.5	20" Giant Carob Briquette Cyst Removal		4-1/2" x 20"	4-1/2" x 20"
14-GCW2-05	20" Giant Carob Wrap		4-1/2" x 20"	4-1/2" x 20"
14-GGAC2-05	20" Giant Granular Activated Carbon		4-1/2" x 20"	4-1/2" x 20"

Filter Cartridge Lengths (9-3/4" vs. 9-7/8")

Nominal 10" filter housings are designed to accept 9-3/4" cartridges, which match the distance between the top and bottom sealing (knife) seats. These cartridges use rigid end caps or gaskets that compress against the housing to create a tight seal and prevent bypass.

9-7/8" cartridges are used only for string wound and spun polypropylene (depth) filters. These cartridges are intentionally made slightly longer (+1/8") because their softer media allows the housing's knife edges to embed into the filter ends. This compression ensures a proper seal and prevents bypass—an issue that can occur if these softer cartridges are only 9-3/4" long.

Rigid cartridge types cannot be manufactured at 9-7/8", as the extra length would prevent proper housing closure and O-ring sealing.



14-GPPE1-05 14-GPSP1-25 14-GSWP1-25 14-GCB1-10 14-GCCR1-0.5 14-GCW1-05 14-GGAC1-05

20" Nominal Filter Cartridge Lengths (20" vs. 20-1/8" Actual)

14-GSP2-XX, 14-GSWP2-XX (20-1/8" Actual)

14-GPPE2-XX, 14-GCB2-XX, 14-GCCR2-XX, 14-GGAC2-XX, 14-GCW2-XX (20" Actual)

BOSHART INDUSTRIES
25 Whaley Avenue, PO Box 310
Milverton, ON CANADA N0K 1M0
Tel: 800-561-3164
VISIT US ONLINE AT BOSHART.COM

For more information on installation, adjustment, repair & operation, visit Boshart Knowledge Base at SUPPORT.BOSHART.COM

© 2026 Boshart Industries Inc. All Rights Reserved.

BII-14FHK-G-0726(2041)

14FHK-HTR SERIES STANDARD HIGH TEMPERATURE FILTER HOUSING KIT

CAUTION: Protect filter housings from freezing, direct sunlight, and excessive pressure spikes or surges, or exposure to chemicals, especially in under sink installations.



APPLICATIONS:
- Hot Water/Liquids
- Photographic
- Salt Water Fisheries
- Ideal for a wide range of commercial and industrial applications

FEATURES:
- Mounting bosses molded in head for installation with mounting bracket
- Housing kit comes complete with filter housing, 1 O-ring installed plus 1 replacement O-ring, mounting bracket & hardware, and filter bowl wrench
- Accepts industry standard filter cartridges (Nominal 2-1/2" Diameter x 10" or 20 Long (not included)
- Durable glass-reinforced nylon construction

SPECIFICATIONS:
- Threads conform to ANSI/ASME B1.20.1 Pipe Threads, General Purpose (Inch)

RATINGS:
- Max Pressure Rating: 125 PSI*

* If working pressure is consistently over 60 PSI, a pressure regulator valve is recommended to extend the lifespan of the bowl.
- Max Temperature Rating: 39°F-165°F (4°C-73.9°C)

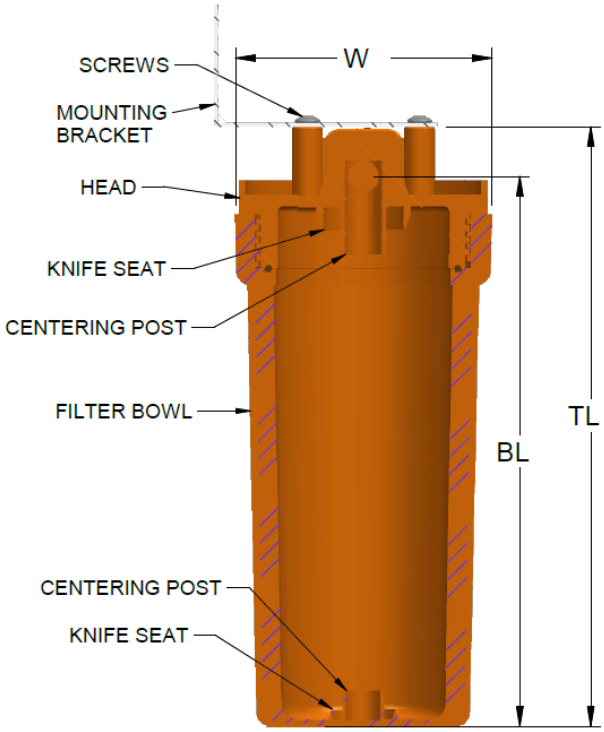

MATERIAL LIST	
Part Name	**Material**
Filter Head	Red Glass-Reinforced Nylon
Filter Bowl	Red Glass-Reinforced Nylon
O-Ring	Viton
Wrench	Acrylonitrile Butadiene Styrene (ABS)
Bracket	White Powder Coated Steel
Hardware	Stainless Steel

DIMENSIONS & SPECIFICATIONS

Part No.	Inlet/ Outlet	Bowl Size	Bowl Color	Flow Rate Initial PSI @ GPM	W		TL		BL		Weight	
					in	mm	in	mm	in	mm	lbs	grams
14FHK-HTR-1007	3/4" FPT	10"	Red	1 PSI @ 10 GPM*	5.14	130.60	12.27	311.60	11.30	287.00	4.22	1915

* Actual flow rates and pressure drop will be determined based on cartridge selection and fluid viscosity.

BOSHART INDUSTRIES
25 Whaley Avenue, PO Box 310
Milverton, ON CANADA N0K 1M0
Tel: 800-561-3164
VISIT US ONLINE AT BOSHART.COM

For more information on installation, adjustment, repair & operation, visit Boshart Knowledge Base at SUPPORT.BOSHART.COM

© 2026 Boshart Industries Inc. All Rights Reserved.

REPLACEMENT PARTS

FILTER HEAD

Part No.	Size
14FHPT-HT-07	3/4" FPT

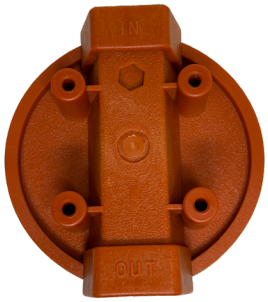

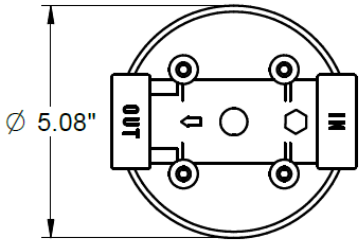

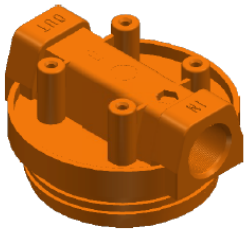

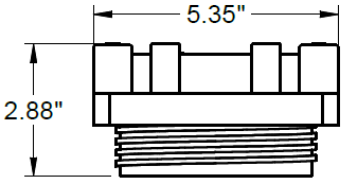

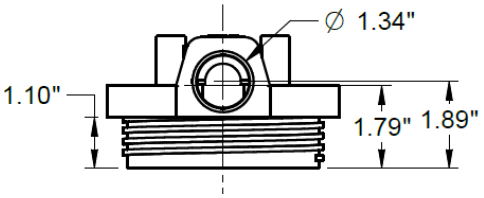

FILTER BOWL

DIMENSIONS						
Part No.	H		W		TW	
	in	mm	in	mm	in	mm
14FHPT-HT-10R	10.64	270.26	5.22	132.59	4.20	106.68



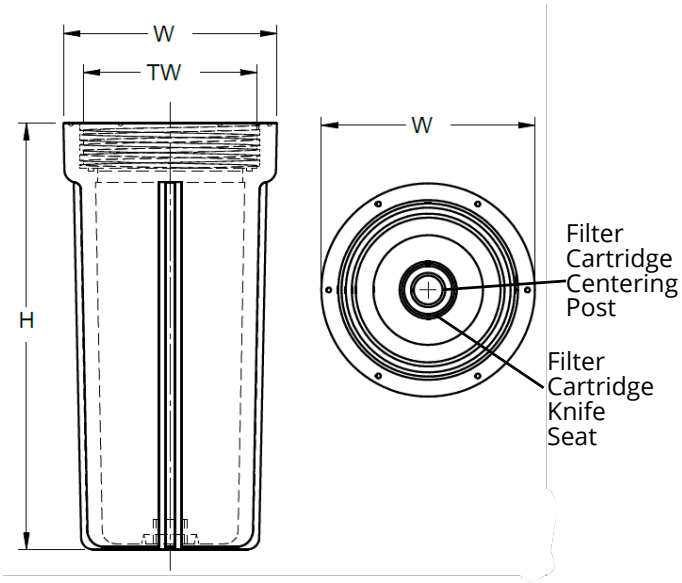

O-RING KIT

Part No.	Fits Housing Size	O-Ring Standard Size	Replacement O-Ring I.D. x C.S.	
			in	mm
14FHPT-HTOR	10"	AS568-240	3.734 x 0.139	94.84 x 3.53



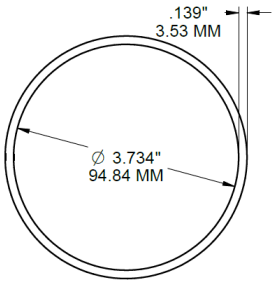

BOSHART INDUSTRIES
25 Whaley Avenue, PO Box 310
Milverton, ON CANADA N0K 1M0
Tel: 800-561-3164
VISIT US ONLINE AT BOSHART.COM

For more information on installation, adjustment, repair & operation, visit Boshart Knowledge Base at SUPPORT.BOSHART.COM

© 2026 Boshart Industries Inc. All Rights Reserved.

FILTER WRENCH

Part No.	Fits Housing Size
14FHPT-SFW	All standard housings



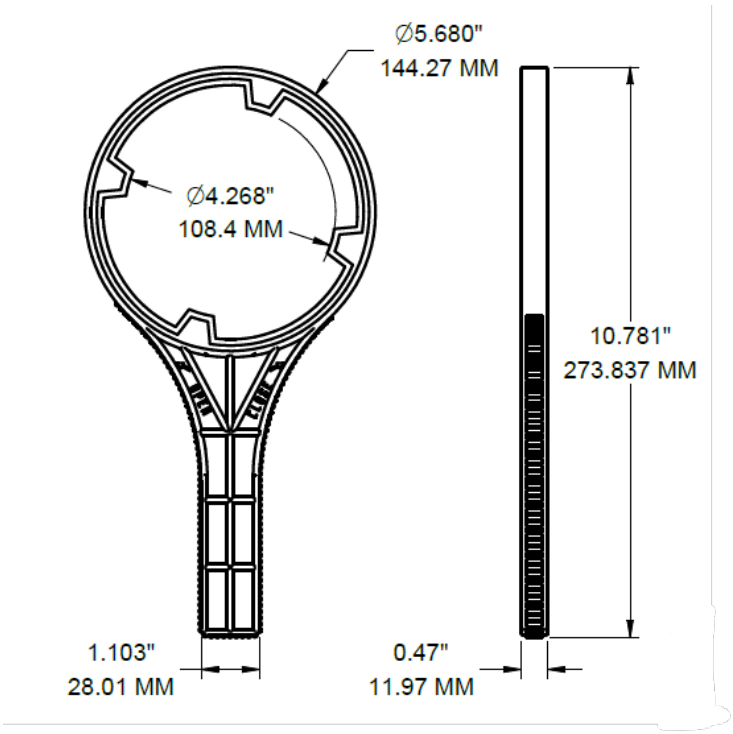

MOUNTING BRACKET KIT

Part No.	Fits Housing Size
14FHPT-SMB	For all high temperature housings



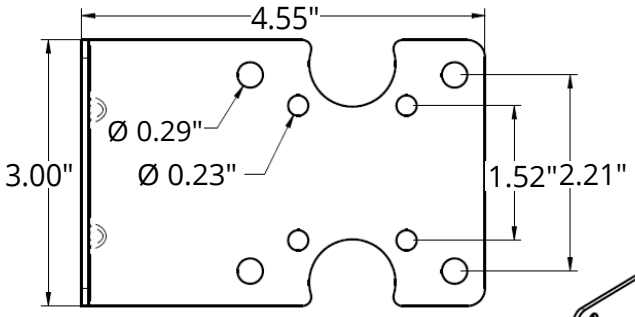

No. 14 Phillips/ Robertson Round Head Screw

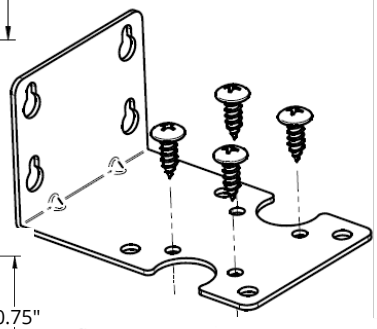

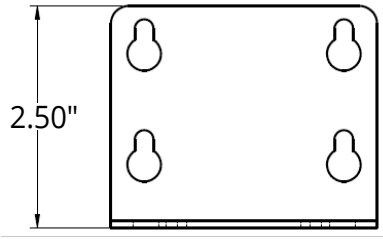

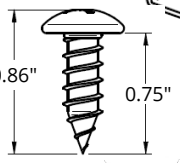

NOTE: Never use a longer screw as there is a risk of puncturing the filter head

BOSHART INDUSTRIES
25 Whaley Avenue, PO Box 310
Milverton, ON CANADA N0K 1M0
Tel: 800-561-3164
VISIT US ONLINE AT BOSHART.COM

For more information on installation, adjustment, repair & operation, visit Boshart Knowledge Base at
SUPPORT.BOSHART.COM

© 2026 Boshart Industries Inc. All Rights Reserved.

FILTER CARTRIDGE COMPATIBILITY:

Cartridge Series Number	Type	Fits Housing Type	Nominal Size	Actual Size
14-SWBC1-XX	10" High Temp String Wound Cotton	Fits 10" red high temp housing	2-1/2" x 10"	2-1/2" x 9-7/8"
14-SWNC1-XX	10" High Temp String Wound Natural Cotton		2-1/2" x 10"	2-1/2" x 9-7/8"

Filter Cartridge Lengths (9-3/4" vs. 9-7/8")

Nominal 10" filter housings are designed to accept 9-3/4" cartridges, which match the distance between the top and bottom sealing (knife) seats. These cartridges use rigid end caps or gaskets that compress against the housing to create a tight seal and prevent bypass.

9-7/8" cartridges are used only for string wound and spun polypropylene (depth) filters. These cartridges are intentionally made slightly longer (+1/8") because their softer media allows the housing's knife edges to embed into the filter ends. This compression ensures a proper seal and prevents bypass—an issue that can occur if these softer cartridges are only 9-3/4" long.

Rigid cartridge types cannot be manufactured at 9-7/8", as the extra length would prevent proper housing closure and O-ring sealing.



14-SWBC1-10



14-SWNC1-05

BOSHART INDUSTRIES
25 Whaley Avenue, PO Box 310
Milverton, ON CANADA N0K 1M0
Tel: 800-561-3164
VISIT US ONLINE AT BOSHART.COM

For more information on installation, adjustment, repair & operation, visit Boshart Knowledge Base at SUPPORT.BOSHART.COM

© 2026 Boshart Industries Inc. All Rights Reserved.

14HK-SS SERIES STAINLESS STEEL EXTREME TEMPERATURE HOUSING KIT

CAUTION: Protect filter housings from freezing, direct sunlight, and excessive pressure spikes or surges, or exposure to chemicals, especially in under sink installations.



APPLICATION:
- Water Well / Municipal Water Supplies (10” & 20”)
- Whole House Point-of-Entry (POE) Residential / Commercial for Sediment Removal (10” & 20”)
- Recreational vehicles (trailers, RV’s) where space is limited (10”)
- Point-of-Use (POU) At Water Faucet/ Under sink for Taste & Odour Removal (10”)
- For high pressure and hot water applications not suited for plastic housings
- Agriculture - Livestock Watering, Drip Irrigation, Greenhouses, Misting & Fogger Nozzles Water Well Systems (10” & 20”)
- Hydronic Heating/ Glycol Filtration
- Industrial/ Chemical Applications

FEATURES:
- Filter head held in place by stainless steel retainer ring
- Mounting bosses molded in head for installation with mounting bracket
- Housing kit comes complete with filter housing, mounting bracket, and wrench
- Accepts industry standard cartridges (Nominal 2-1/2” Diameter x 10” or 20 Long (not included)

SPECIFICATION:
- Threads conform to ANSI/ASME B1.20.1 - Pipe Threads, General Purpose, Inch
- 316 Stainless Steel (SS alloys do not contain any lead 0.00% Pb)
- Drain Port tapped 1/4" (9/16” - 18 UNF)

CERTIFICATIONS:
- NSF/ANSI 42 - Drinking Water Treatment Units - Aesthetic Effects

RATINGS:
- Max Pressure Rating: 300 PSI (2068.43 kPa)
- Max Temperature Rating: 300°F (149°C)

Alloy Composition 316 Stainless Steel	
Element	**Min/Max %**
Nickel (Ni)	10-14%
Chromium (Cr)	16-18%
Molybdenum (Mo)	2-3%
Carbon (C)	0.08%

IMPORTANT:
- If working pressure is consistently over 60 PSI, or possibility of pressure spikes/surges in water supply, the installation of a pressure regulator valve is highly recommended to protect your home’s appliances and faucets against damage due to hydraulic shock/water hammer and preventable water damage due to leaking faucets.
- **WARNING!** To reduce the risk associated with the ingestion of contaminants: Do not use the filters with water that is microbiologically unsafe or of unknown quality without adequate disinfection before or after the system.

BOSHART INDUSTRIES

25 Whaley Avenue, PO Box 310
Milverton, ON CANADA N0K 1M0
Tel: 800-561-3164

VISIT US ONLINE AT BOSHART.COM

For more information on installation, adjustment, repair & operation, visit Boshart Knowledge Base at SUPPORT.BOSHART.COM

© 2026 Boshart Industries Inc. All Rights Reserved.

BII-14HK-SS-0426(1186)

MATERIAL LIST	
Part Name	**Material**
Filter Head	316 Stainless Steel
Filter Bowl	316 Stainless Steel
Retainer Ring	316 Stainless Steel
O-Ring	Fluoroelastomer (FPM) Rubber (Viton®)
Top Gasket	Fluoroelastomer (FPM) Rubber (Viton®)
Drain Plug	316 Stainless Steel
Bracket	316 Stainless Steel
Hardware	316 Stainless Steel

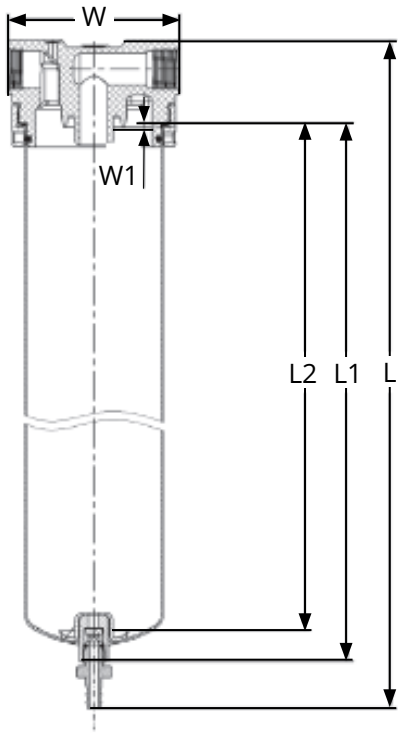

DIMENSIONS & SPECIFICATIONS															
Part No.	**Inlet/ Outlet**	**Bowl Length**	**Flow Rate Initial PSI @ GPM**	**W**		**W1**		**L**		**L1**		**L2**		**Weight**	
				in	**mm**	**in**	**mm**	**in**	**mm**	**in**	**mm**	**in**	**mm**	**lbs**	**grams**
14HK-SS10-07	3/4" NPT	10"	1 PSI @ 10 GPM*	4.09	110.00	3.46	3.00	12.40	354.40	9.72	271.10	9.84	249.90	6.61	3000
14HK-SS20-07		20"		4.09	110.00	3.46	3.00	23.96	608.60	20.69	525.60	19.90	505.50	7.72	3500

* Actual flow rates and pressure drop will be determined based on cartridge selection and fluid viscosity.

REPLACEMENT PARTS

O-RING KIT

DIMENSIONS				
Part No.	**Fits Housing Size**	**O-Ring Standard Size**	**Replacement O-Ring I.D. x C.S.**	
			in	**mm**
14A-ORSS-03	10" & 20"	AS568-237	3.359 x 0.139	85.32 x 3.53

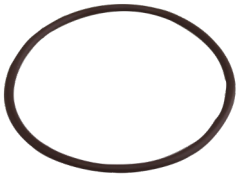

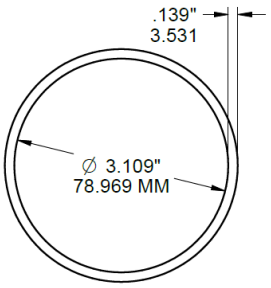

BOSHART INDUSTRIES

25 Whaley Avenue, PO Box 310
Milverton, ON CANADA N0K 1M0
Tel: 800-561-3164

VISIT US ONLINE AT BOSHART.COM

For more information on installation, adjustment, repair & operation, visit Boshart Knowledge Base at
SUPPORT.BOSHART.COM

© 2026 Boshart Industries Inc. All Rights Reserved.

FILTER WRENCH

Part No.	Size	Description	**Please note filter wrenches are compatible between both series of SS housings
14A-FWSS-03	1/4"	Standard Filter Wrench	
14FHPT-GSSFW	1/2"	Giant Filter Wrench	

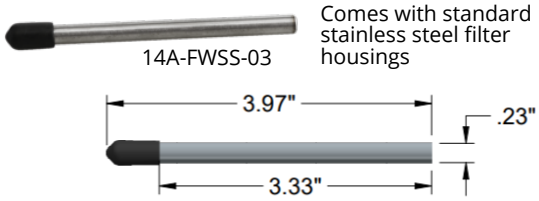

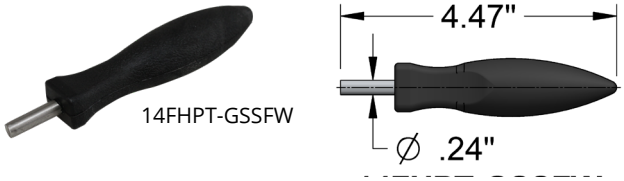

MOUNTING BRACKET

Does not come with replacement hardware.

Part No.	Fits Housing Size
14A-MBSS-03	All standard high temperature housings

NOTE: Never use a longer screw as there is a risk of puncturing the filter head



No. 10 Phillips/ Robertson Round Head Screw

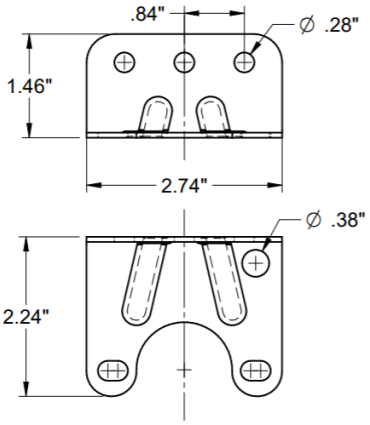

TOP GASKET

Part No.	Sizing I.D. x C.S.	
	in	mm
14A-TGSS-03	3.400 x 0.185	86.36 x 4.70



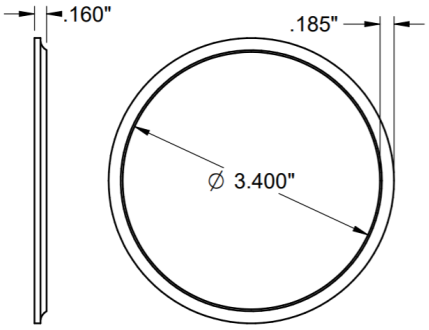

BOSHART INDUSTRIES
25 Whaley Avenue, PO Box 310
Milverton, ON CANADA N0K 1M0
Tel: 800-561-3164
VISIT US ONLINE AT BOSHART.COM

For more information on installation, adjustment, repair & operation, visit Boshart Knowledge Base at SUPPORT.BOSHART.COM

© 2026 Boshart Industries Inc. All Rights Reserved.

DRAIN PLUG

Part No.	Description	Size
14A-DPSS-03	Includes seals	9/16”-18 UNF



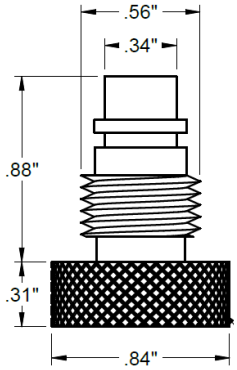

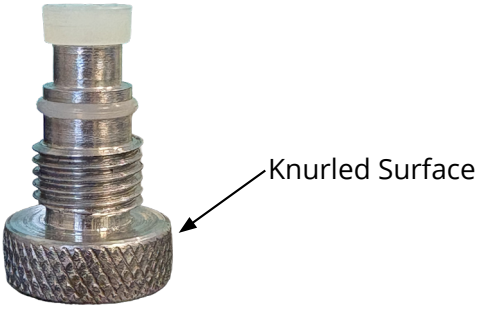

DRAIN PLUG SEAL KIT

Part No.
14A-DPSKSS-03

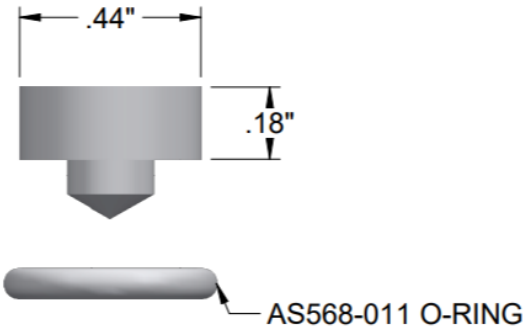



BOSHART INDUSTRIES
25 Whaley Avenue, PO Box 310
Milverton, ON CANADA N0K 1M0
Tel: 800-561-3164
VISIT US ONLINE AT BOSHART.COM

For more information on installation, adjustment, repair & operation, visit Boshart Knowledge Base at
SUPPORT.BOSHART.COM

© 2026 Boshart Industries Inc. All Rights Reserved.

FILTER CARTRIDGE COMPATIBILITY:

Cartridge Series Number	Type	Fits Housing Type	Nominal Size	Actual Size
14-SWBC1-XX	10" High Temp String Wound Cotton	Fits 10" stainless steel high temp housing	2-1/2" x 10"	2-1/2" x 9-7/8"
14-SWNC1-XX	10" High Temp String Wound Natural Cotton		2-1/2" x 10"	2-1/2" x 9-7/8"
14-SWBC2-XX	20" High Temp String Wound Cotton	Fits 20" stainless steel high temp housing	2-1/2" x 20"	2-1/2" x 20"
14-SWNC2-XX	20" High Temp String Wound Natural Cotton		2-12" x 20"	2-1/2" x 20"

*Standard Filter Cartridges that have a 2-1/2” diameter are compatible with the SS Filter Housing at the appropriate nominal length for the unit.

Filter Cartridge Lengths (9-3/4" vs. 9-7/8")

Nominal 10" filter housings are designed to accept 9-3/4" cartridges, which match the distance between the top and bottom sealing (knife) seats. These cartridges use rigid end caps or gaskets that compress against the housing to create a tight seal and prevent bypass.

9-7/8" cartridges are used only for string wound and spun polypropylene (depth) filters. These cartridges are intentionally made slightly longer (+1/8") because their softer media allows the housing’s knife edges to embed into the filter ends. This compression ensures a proper seal and prevents bypass—an issue that can occur if these softer cartridges are only 9-3/4" long.

Rigid cartridge types cannot be manufactured at 9-7/8", as the extra length would prevent proper housing closure and O-ring sealing.



14-SWNC2-10



14-SWBC2-05

BOSHART INDUSTRIES
25 Whaley Avenue, PO Box 310
Milverton, ON CANADA N0K 1M0
Tel: 800-561-3164
VISIT US ONLINE AT BOSHART.COM

For more information on installation, adjustment, repair & operation, visit Boshart Knowledge Base at
SUPPORT.BOSHART.COM

© 2026 Boshart Industries Inc. All Rights Reserved.

14FHK-GSS SERIES GIANT FILTER HOUSING KIT

CAUTION: Protect filter housings from freezing, direct sunlight, and excessive pressure spikes or surges, or exposure to chemicals, especially in under sink installations.



APPLICATIONS:

- Water Well / Municipal Water Supplies (10” & 20”)
- Whole House Point-of-Entry (POE) Residential / Commercial for Sediment Removal (10” & 20”)
- Recreational vehicles (trailers, RV’s) where space is limited (10”)
- Point-of-Use (POU) At Water Faucet/ Under sink for Taste & Odour Removal (10”)
- For high pressure and hot water applications not suited for plastic housings
- Agriculture - Livestock Watering, Drip Irrigation, Greenhouses, Misting & Fogger Nozzles Water Well Systems (10” & 20”)
- Hydronic Heating/ Glycol Filtration
- Industrial/ Chemical Applications
- Higher flow capacity

FEATURES:

- SS Filter Head Nut tightens sump to filter head to ensure a positive compression seal
- Kit components include: 304 Stainless Steel 10” or 20” Giant Filter Housing, 304 SS Giant Filter Mounting Bracket with hardware, Two 304 SS Giant Filter Wrenches, Replacement Seal Kit (O-Ring and L Shaped Gasket)
- Accepts industry standard giant filter cartridges (Nominal 4-1/2” Diameter x 10” or 20 Long (not included)
- Mounting bosses molded in head for installation with mounting bracket, filter is supplied with 4 stainless steel 1/4”-20 UNC x 3/8” long hex head bolts
- Drain port thread: 1/2” - 18 UNS

SPECIFICATIONS:

- 304 Stainless Steel construction (SS alloys do not contain any lead 0.00% Pb)
- 1” NPT Connection (10” housing), 1-1/2” NPT Connection (20” housing)
- Fluoro Rubber (FPM, Viton®) O-Ring and L shaped gasket

Alloy Composition 304 Stainless Steel	
Element	**Min/Max %**
Chromium (Cr)	18.0-20.0
Iron (Fe)	64.995-74.0
Manganese (Mn)	2.00 Max
Nickel (Ni)	8.0-12.0

RATINGS:

- Max Pressure Rating: 250 PSI (1723.69 kPa)
- Max Temperature Rating: 275°F (135°C)

IMPORTANT:

- If working pressure is consistently over 60 PSI, or possibility of pressure spikes/surges in water supply, the installation of a pressure regulator valve is highly recommended to protect your home’s appliances and faucets against damage due to hydraulic shock/water hammer and preventable water damage due to leaking faucets.

- **WARNING!** To reduce the risk associated with the ingestion of contaminants: Do not use the filters with water that is microbiologically unsafe or of unknown quality without adequate disinfection before or after the system.

BOSHART INDUSTRIES
25 Whaley Avenue, PO Box 310
Milverton, ON CANADA N0K 1M0
Tel: 800-561-3164
VISIT US ONLINE AT BOSHART.COM

For more information on installation, adjustment, repair & operation, visit Boshart Knowledge Base at SUPPORT.BOSHART.COM

© 2026 Boshart Industries Inc. All Rights Reserved.

MATERIAL LIST		
Item No.	**Description**	**Material**
1	Mounting Bracket	304 Stainless Steel
2	1/4"-20 UNC X 3/8"Long Hex. Head Bolt	304 Stainless Steel
3	Filter Head	304 Stainless Steel
4	Filter Head Nut	304 Stainless Steel
5	L Shaped Gasket	Fluoroelastomer (FPM) Rubber (Viton®)
6	Filter Bowl O-Ring	Fluoroelastomer (FPM) Rubber (Viton®)
7	Filter Bowl	304 Stainless Steel
8	Spring Loaded Knife Seal (attached, not replaceable)	304 Stainless Steel
9	Drain Plug O-Ring - AS568-011	Nitrile Butadiene Rubber (NBR)
10	Drain Plug	304 Stainless Steel

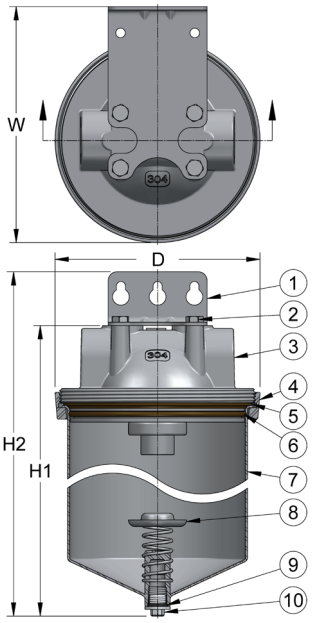

DIMENSIONS & SPECIFICATIONS													
Part No.	**Inlet/Outlet Connections**	**Bowl Length**	**Flow Rate Initial PSI @ GPM**	**D**		**W**		**H1**		**H2**		**Weight**	
				in	**mm**	**in**	**mm**	**in**	**mm**	**in**	**mm**	**lbs**	**grams**
14FHK-GSS-1010	1" NPT	10"	1 PSI @ 15 GPM	5.69	144.6	6.58	167.1	15.03	381.7	16.53	419.8	8.32	3773
14FHK-GSS-2015	1-1/2" NPT	20"	1 PSI @ 20 GPM	5.69	144.6	6.58	167.1	25.66	651.7	27.16	689.8	12.39	5620

* Actual flow rates and pressure drop will be determined based on cartridge selection and fluid viscosity.

REPLACEMENT PARTS:

Mounting Bracket Kit

■ Comes with hardware

Part No.	Size
14FHPT-GSSMB	3/4"

NOTE: Never use a longer screw as there is a risk of puncturing the filter head



1/4"-20 x 3/8" UNC Mounting Bolts

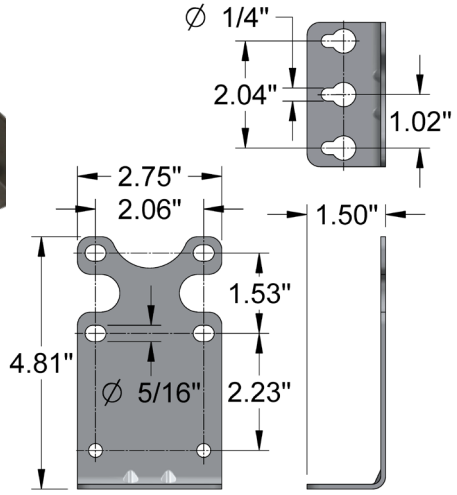

SSH304P-05



NOTE: Drain plug with O-ring not available as replacement part. Filter bowl is threaded 1/2" FPT. Standard 1/2" MPT SS pipe plug is compatible as a replacement drain plug (SSH304P-05).

BOSHART INDUSTRIES

25 Whaley Avenue, PO Box 310
Milverton, ON CANADA N0K 1M0
Tel: 800-561-3164

VISIT US ONLINE AT BOSHART.COM

For more information on installation, adjustment, repair & operation, visit Boshart Knowledge Base at SUPPORT.BOSHART.COM

© 2026 Boshart Industries Inc. All Rights Reserved.

Filter Wrenches

Part No.	Size
14FHPT-GSSFW	3/4"



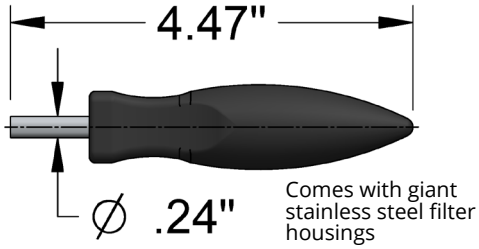

Replacement Seal Kit

DIMENSIONS					
Part No.	Description	Fits Housing Size	Standard Size	Standard Measurements	
				in (I.D. x C.S.)	mm (I.D. x C.S.)
14FHPT-GSSRSK	O-Ring	10" & 20"	AS568-244	4.234 x 0.139	107.54 x 3.53
	L-Shaped Gasket		N/A	3.093 x 0.188	78.56 x 4.78

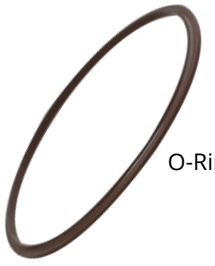

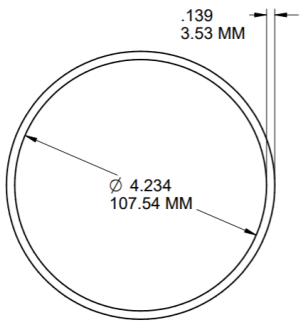

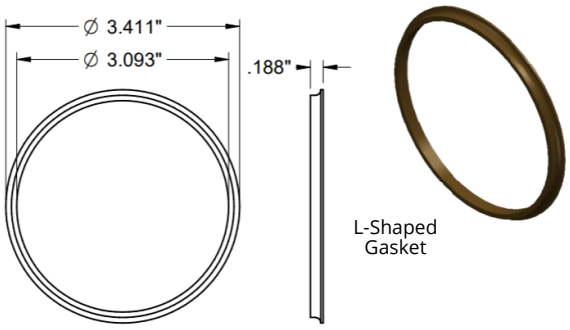

BOSHART INDUSTRIES
25 Whaley Avenue, PO Box 310
Milverton, ON CANADA N0K 1M0
Tel: 800-561-3164
VISIT US ONLINE AT BOSHART.COM

For more information on installation, adjustment, repair & operation, visit Boshart Knowledge Base at SUPPORT.BOSHART.COM

© 2026 Boshart Industries Inc. All Rights Reserved.

FILTER CARTRIDGE COMPATIBILITY:

Cartridge Series Number	Type	Fits Housing Type	Nominal Size	Actual Size
14-GSWBC1-XX	10” High Temp String Wound Cotton	Fits 10" stainless steel high temp housing	4-1/2” x 10”	4-1/2” x 10”
14-GSWBC2-XX	20” High Temp String Wound Cotton	Fits 20” stainless steel high temp housing	4-1/2” x 20”	4-1/2” x 20”

*Giant Filter Cartridges that have a 4-1/2” diameter are compatible with the SS Giant FHK at the appropriate nominal length for the unit.

Filter Cartridge Lengths (9-3/4" vs. 9-7/8")

Nominal 10" filter housings are designed to accept 9-3/4" cartridges, which match the distance between the top and bottom sealing (knife) seats. These cartridges use rigid end caps or gaskets that compress against the housing to create a tight seal and prevent bypass.

9-7/8" cartridges are used only for string wound and spun polypropylene (depth) filters. These cartridges are intentionally made slightly longer (+1/8") because their softer media allows the housing’s knife edges to embed into the filter ends. This compression ensures a proper seal and prevents bypass—an issue that can occur if these softer cartridges are only 9-3/4" long.

Rigid cartridge types cannot be manufactured at 9-7/8", as the extra length would prevent proper housing closure and O-ring sealing.

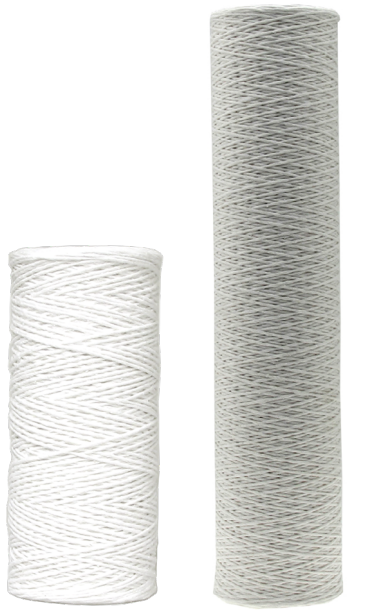

14-GSWBC1-10 14-GSWBC2-05

BOSHART INDUSTRIES
25 Whaley Avenue, PO Box 310
Milverton, ON CANADA N0K 1M0
Tel: 800-561-3164
VISIT US ONLINE AT BOSHART.COM

For more information on installation, adjustment, repair & operation, visit Boshart Knowledge Base at SUPPORT.BOSHART.COM

© 2026 Boshart Industries Inc. All Rights Reserved.

INSTALLATION:

These installation instructions are applicable to the following series:

14FHK-SL: Slim line Filter Housings
14FHK-S: Standard Filter Housings
14FHK-G: Giant Filter Housings
14FHK-HTR: High Temperature Filter Housings
14HK-SS: 304SS Standard Filter Housings
14FHK-GSS: 304SS Giant Filter Housings

IMPORTANT: Read all specifications, installation instructions, and warnings before installing water filter housings.

IMPORTANT: Filter cartridges should be inspected before installation. Do not install cartridges showing signs of damage, contamination, mold or deterioration. Always follow the manufacturer's recommendations for storage, handling and replacement.



Parts and Materials Included

- Filter housing
- Mounting bracket and hardware
- Filter bowl wrench
- Replacement O-ring

Tools and Materials Required

- Adjustable wrench
- Fittings (refer to diagrams below)
- Ball type shut off valves
- NSF 61 Certified Silicone based lubricant (OR-LUBE)
- Pipe cutter
- Sandpaper and pipe de-burring tool
- Tape measure and pencil
- Filter cartridge
- Optional: Jumper Wire (required if you have metal piping to ground your system)
- Pipe thread sealing compound suitable for potable water (Boshart Gray Magic)

CAUTION: Not recommended to use PTFE tape as it acts as a wedge. As you screw the plastic male fitting into the plastic filter head, the tape packs the threads and dramatically increases radial and tensile stress

WARNING: Risk of electrical shock. If your water pipes are used to ground your houses electrical system, install jumper wires around the filter. Consult a building inspector or licensed electrician for more information.

WARNING: Do not use with water that micro-biologically unsafe or of unknown quality without adequate disinfection before or after the system.

CAUTION: All filtration systems contain parts that have a limited service life which cannot be easily detected. Therefore, filter housings should be installed in an area where leakage will not cause property damage.

NOTE: Allow at least 2" above the filter head (for bracket, housing and shut off valve installation) and at least 3" below the filter bowl (for changing cartridge).

BOSHART INDUSTRIES
25 Whaley Avenue, PO Box 310
Milverton, ON CANADA N0K 1M0
Tel: 800-561-3164
VISIT US ONLINE AT BOSHART.COM

For more information on installation, adjustment, repair & operation, visit Boshart Knowledge Base at
SUPPORT.BOSHART.COM

© 2026 Boshart Industries Inc. All Rights Reserved.

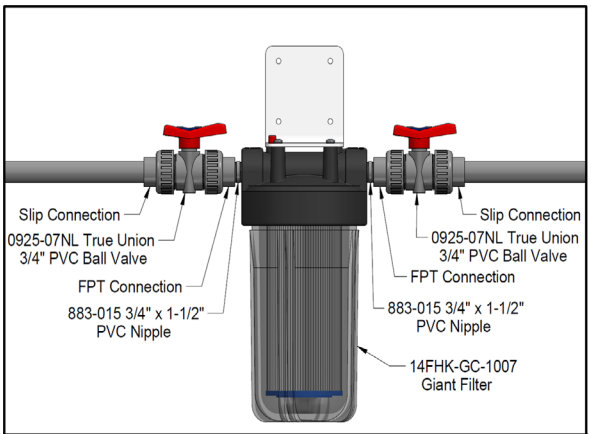

1. **Recommended Installation for PVC Fittings**

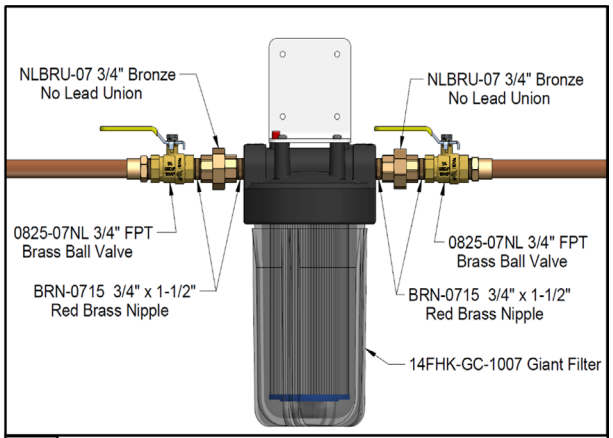

1. **Recommended Installation for Copper Fittings**

1. The recommended installation has a shut-off valve on both the inlet and outlet sides of the filter.

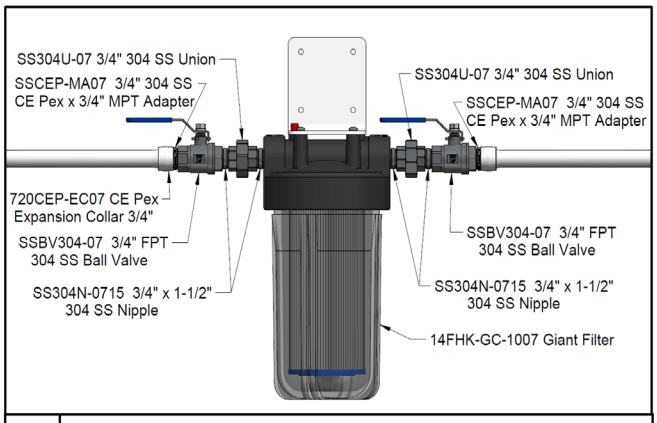

1. **Recommended Installation for Stainless Steel Fittings**

2. Using thread sealant, hand tighten pipe fittings to the new filter head, being careful not to cross threads. Using the wrench, firmly tighten one half turn only. Do not over tighten.

3. Turn off the water supply and release system pressure by opening the nearest faucet. Leave the faucet open.

4. Housing Replacement: Disconnect pipe,tubing from the filter head connections. New Installation: Measure (4(A)) and cut out (4(B)) enough pipe to allow for the total combined length of the filter head, fittings, and valves to be installed. Have a bucket ready to catch any water that may come out of the pipe. Remove burrs and sharp edges from pipe ends.

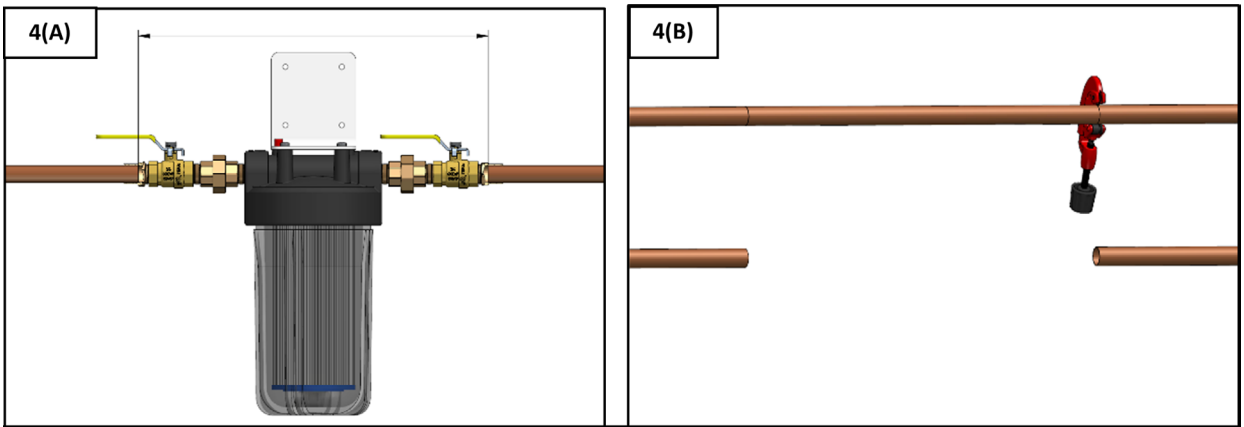

Measure and cut out enough pipe for the combined length of filter head, fittings, and valves.

BOSHART INDUSTRIES
25 Whaley Avenue, PO Box 310
Milverton, ON CANADA N0K 1M0
Tel: 800-561-3164
VISIT US ONLINE AT BOSHART.COM

For more information on installation, adjustment, repair & operation, visit Boshart Knowledge Base at
SUPPORT.BOSHART.COM

© 2026 Boshart Industries Inc. All Rights Reserved.

5. Mounting Bracket: Positioning the end marked “IN” facing the incoming water supply line, install onto the filter head using the screws provided. Mark out the location on the wall ensuring it is level, centered, and has proper support. Mount the bracket into position.

6. Align the filter assembly with ends of pipe. It will be necessary to spreads the end of the pipe apart to install filter assembly. Using two adjustable wrenches, holds incoming adaptor securely with one wrench and tighten nut with second wrench. Repeat procedure for outgoing adaptor.

7. Install the filter cartridge and filter bowl onto the filter head Turn the bowl until hand tight. Do not over-tighten.

8. Close all valves (except for the faucet) and slowly turn on the water supply. Depress and continue to hold the red air release button while slowly opening the inlet valve. Allow water to fill the housing until it flows out of the release button. Open the outlet valve slowly to purge air from the line.

9. Keep the faucet open to flush the system for several minutes. Check for leaks.

10. Optional: If water pipes are used to ground electrical system, install a jumper wire. Jumper wire must satisfy all NEC or CEC and local codes.

7.

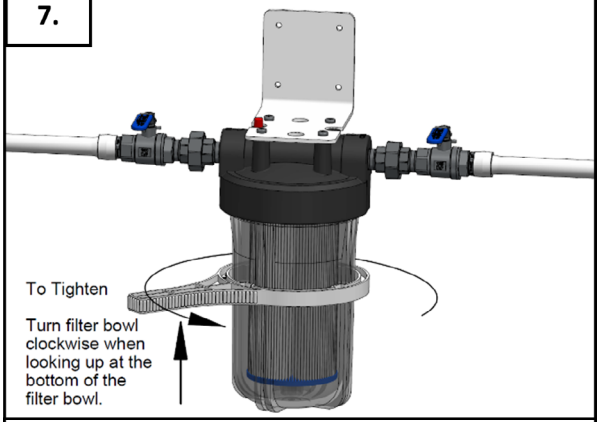

Install the filter cartridge and bowl.

10.

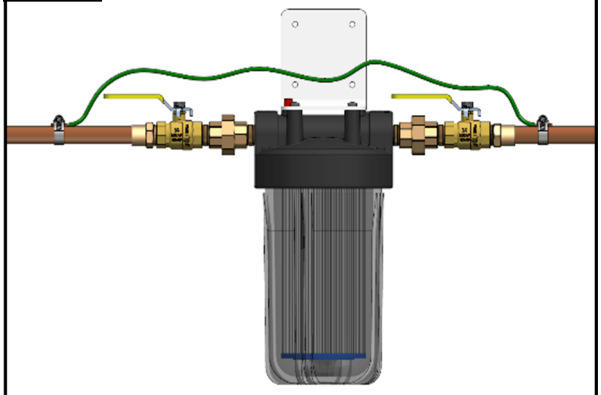

Install a jumper wire if copper pipes are used for grounding.

IMPORTANT: Ensure all gaskets from old cartridge are not laying in the bottom of the bowl as the new cartridge will not fit in.

BOSHART INDUSTRIES
25 Whaley Avenue, PO Box 310
Milverton, ON CANADA N0K 1M0
Tel: 800-561-3164
VISIT US ONLINE AT BOSHART.COM

For more information on installation, adjustment, repair & operation, visit Boshart Knowledge Base at
SUPPORT.BOSHART.COM

© 2026 Boshart Industries Inc. All Rights Reserved.

11. Optional: Install a bypass section around the filter, a parallel filter configuration (B) or a series filter configuration (C).

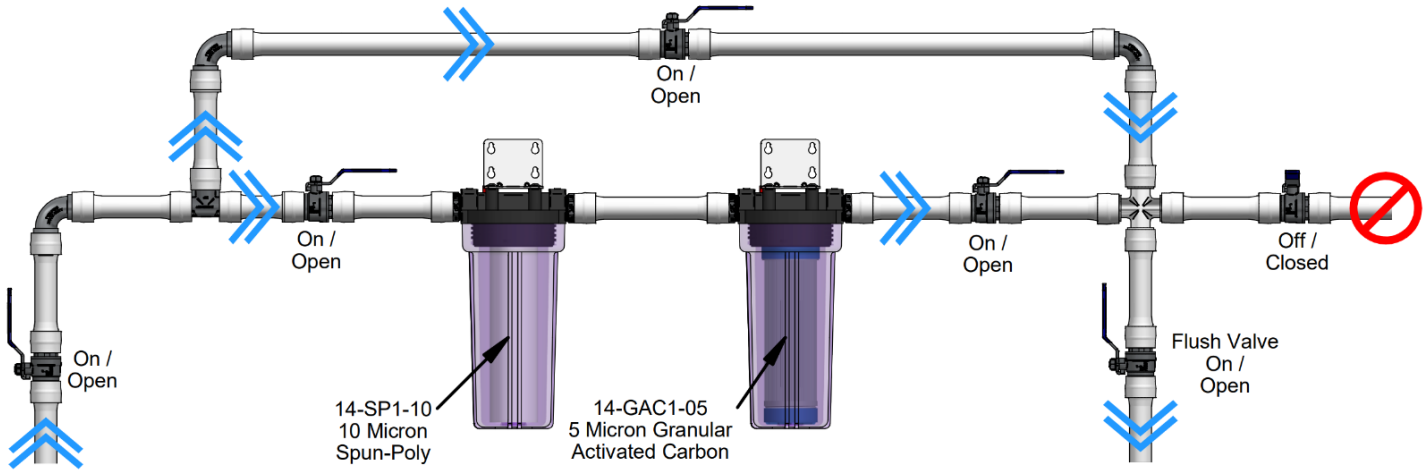

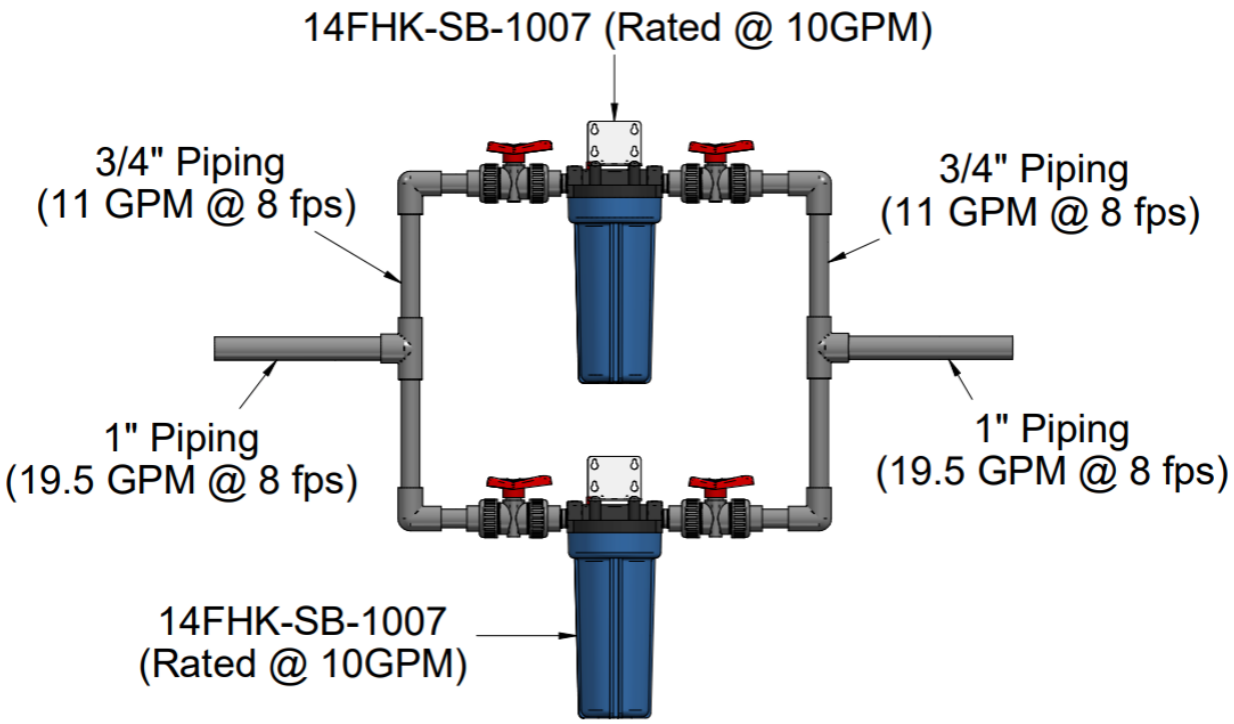

© 2026 Boshart Industries Inc. All Rights Reserved.

FILTER CARTRIDGE REPLACEMENT:

NOTES:

- **Micron Rating:** The lower the micron rating, the smaller the particle size cartridge filters remove.
- **Filter Life:** Filter life varies depending on usage and water conditions. Changes in tastem colour and flow of the water being filtered are signs that replacement of the cartridge may be necessary.
- **Flow Rates:** Actual maximum flow rates versus pressure drop will depend on cartridge selections and fluid viscosity.
- **Carbon Powder:** An activated carbon cartridge may contain a small amount of carbon dust, and a newly installed cartridge should be flushed with sufficient water to remove the fines before using the water.
- **Cellulose:** Cartridges containing cellulose may seem to disintegrate, produce a “sewer” or “rotten egg” odour, or form a black precipitate due to a reaction with some types of harmless bacteria. If you notice any of the above problems while using cellulose cartridges, switch to a synthetic cartridge.

Instructions

1. Shut off the inlet and outlet valves and depress the air release button on the housing the eliminate system pressure.

2. Place and bucket directly under the filter housing to collect water.

3. Using a filter wrench, remove the bowl by gently unscrewing counter-clockwise.

4. Remove and discard the used cartridge. Empty the filter bowl into the bucket.

5. Remove O-Rings and wipe clean of any dirt and lubricant. Inspect for damage and set aside. If O-Ring is damaged, discard and replace it.

6. Fill the bowl 1/3 of the way with water and add 1 Tbsp of bleach. Scrub thoroughly with a non-abrasive sponge or cloth to remove any build up of rust and scale particles. Rinse and ensure the O-Ring groove seating area is free of dirt.

7. Remove protective packaging from new cartridge and place it into the bowl, fitting it over the post.

8. Lubricate new or cleaned O-Ring with a silicone based lubricant and place it into the groove. Make sure it is seated level and evenly.

9. Install the bowl clockwise, turning slowly until the cartridge aligns with the post in the filter head. Hand tighten. Do not over tighten.

10. Depress and continue to hold the red air release button while slowly opening the inlet valve as water fills the housing. Continue until water flows out of the release button. Open the outlet valve slowly to purge air from the line.

11. Flush the system for several minutes before use. Check for leaks.

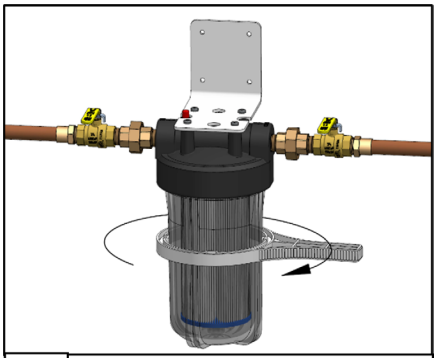

3.	Remove the filter bowl.

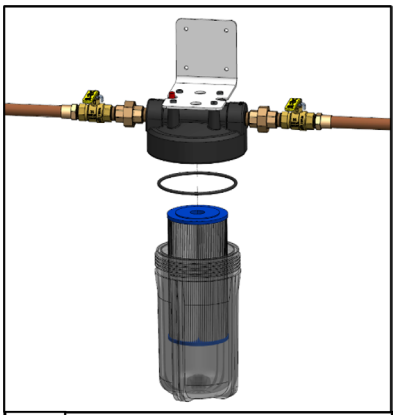

5.	Remove and clean O-ring.

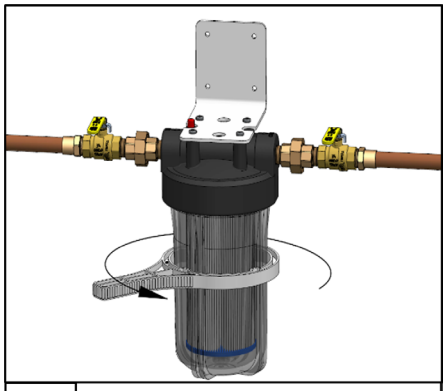

9.	Install filter bowl and hand tighten.

BOSHART INDUSTRIES
25 Whaley Avenue, PO Box 310
Milverton, ON CANADA N0K 1M0
Tel: 800-561-3164
VISIT US ONLINE AT BOSHART.COM

For more information on installation, adjustment, repair & operation, visit Boshart Knowledge Base at
SUPPORT.BOSHART.COM

© 2026 Boshart Industries Inc. All Rights Reserved.