07ST & 2-07TK SERIES - 304SS & BRASS TANK TEES

Boshart's tank tees are a multi-port fitting that is designed to connect a tank to the water system. Their compact design makes a clean looking installation reducing the number of joints and potential leak points. They provide faster installation of a water system and are compact. They come in a variety of union and non-union types. Union tees allow for quick and easy replacement of the tank when required. They are manufactured using AS568 American Standard O-rings, which ensure watertight connections.

NO LEAD <0.25% Pb by weighted avg. | THIRD PARTY CERTIFIED TO NSF / ANSI 372

A wide range of center end length (CEL) options are available to accommodate any brand and diameter of tank on the market. They are made of No-lead Brass, 304 Stainless Steel, and PVC materials. No-lead Brass NSF/ANSI 372 test criteria requires <0.25% Pb by weighted average. 304SS and PVC tank tees do not contain any lead (0.00% Pb), although they require the same NSF/ANSI 372 certification to be sold in some areas.

SPECIFICATIONS:

- NPT pipe thread connections conform to ANSI/ASME B1.20.1
- Union nut threads: Straight threads
- O-ring material: Nitrile rubber
- Brass union nut material: Leaded brass C85700

RATINGS:

- Maximum pressure rating: 200 PSI
- Maximum temperature rating: 100 °F (37.7 °C)

CERTIFICATIONS:

- NSF/ANSI Standard 372 Certified

2-07TK-13S-2NL
Short Pattern Brass
Solid Tank Tee

2-07TK-13SF-2UNL
Short Pattern Brass
Union Tank Tee

2-07TKO-25S-2UNL
Short Pattern Brass
Union Tank Tee

2-07TK-25S-2NL
Short Pattern Brass
Solid Tank Tee

2-07TKO-13-2UNL
Long Pattern Brass
Union Tank Tee

2-07TK-14X1-2NL
Long Pattern Brass
Solid Tank Tee

07TK-25S-2-WMNL
Wellmate Quick
Connect Tank Tee

07ST-13S-2U
Short Pattern 304SS
Union Tank Tee

07ST-25SF-2U
Short Pattern 304SS
Union Tank Tee

07ST-25-2U
Long Pattern 304SS
Union Tank Tee

07ST-25S-2
Short Pattern 304SS
Solid Tank Tee

07ST-25SFH-2
Tank Tee Head

07ST-25-2
Long Pattern 304SS
Solid Tank Tee

In order to select the correct tank tee for your application, you must first determine which type of tank your system uses!

User Responsibility Statement: It is the user's sole responsibility to determine the product's suitability for it's intended use. For full details, visit Boshart Industries Reference Documents or our User Safety Responsibility Statement and other important documents.

BOSHART INDUSTRIES
25 Whaley Avenue, PO Box 310, Milverton
ON CANADA N0K 1M0
Tel: 800-561-3164
VISIT US ONLINE AT BOSHART.COM

For more information on installation, adjustment, repair & operation, visit Boshart Knowledge Base at
SUPPORT.BOSHART.COM

© 2026 Boshart Industries Inc. All Rights Reserved.

BII-07ST,2-07TK-1026(1717,81,81BF,81P100)V4.1

Material Selection

304 Stainless Steel
304 Stainless Steel tank tees provide excellent corrosion resistance; the stainless material provides the highest strength and resistance to stress cracking at the female accessory ports. Stainless tees should be selected for installations where the water quality is unknown, or known to be aggressive. Stainless does not contain any zinc, therefore dezincification corrosion is a non-issue, whereas brass alloys having more than 15% zinc content are susceptible to accelerated dezincification corrosion when the water quality is questionable. Although stainless tees are more expensive than brass, they do not contain zinc, alleviating problems with dezincification.

NOTE: Stainless steel is a harder material. Special anti-seize/anti-galling thread sealants are recommended to consistently obtain a seal at the joints. Following best practices for making stainless steel connections will reduce the chance of galling or a leaky connection. Boshart suggests the use of both P.T.F.E. (Polytetrafluoroethylene) Thread Seal Tape and Gray Magic Thread Sealing Compound (or any thread sealant that is specially formulated for stainless connections to reduce the chance of galling). See Knowledgebase article titled Making a Leak Proof Stainless Steel Threaded Connection at Support.Boshart.com.

Brass Alloy Tank Tees
Brass tank tees are less expensive due to the higher zinc content, and suitable for installation in many areas where the water quality is known to be very good and non – aggressive. However, the zinc content makes brass susceptible to accelerated dezincification corrosion. It is easier to make a watertight seal using P.T.F.E. tape with brass tees than with stainless steel which requires the use of both P.T.F.E. tape and a high-quality thread sealing compound. There is no issue with galling which can be an issue with stainless joints if proper sealants are not used.

PVC Tank Tees
PVC tank tees are a competitive option compared to stainless steel, brass, and galvanized materials. They do not corrode, however they are not as structurally strong as metal tank tees, and the product line is very limited to a few items and unfortunately, they are not currently available in a union design. They are a very suitable alternative when proper PVC installation practices are followed. The use of a high-quality thread sealant paste rather than P.T.F.E. thread sealant tape and avoiding over tightening will reduce the risk of over stressing the female NPT accessory ports.

Galvanized Tank Tees
Galvanized tees are less expensive than both stainless steel and brass tank tees. Their use is typically limited to installations on galvanized hydropneumatics pressure tanks (tanks without a bladder or diagram). Galvanized tees are selected to eliminate the risk of galvanic corrosion between dissimilar metals. Galvanized tank tees used in conjunction with galvanized nipples and fittings solves the problem. It is important to note that some plumbing codes do not allow the use of galvanized fittings and nipples. One must verify that galvanized tank tees meet all the applicable plumbing code requirements.

Union vs. Non-Union
The choice is yours, however in our opinion there is no debate, the best way to go is to install a union tank tee! It is not a matter of if, but rather when your pre-charged pressure tank, regardless of make or model, will come to the end of its life. The few extra dollars invested to purchase a union tee will pay you back many times over in saved time and labour when it comes time to replace the pressure tank. The union allows you to easily disconnect the tank, leaving all the other plumbing connections and electrical wiring intact. Simply drain all the water from the tank, disconnect the tank at the union, lift out the tank, remove the leg portion by unthreading (counterclockwise rotation) from the old tank, and install it on the new tank. Place the tank back into position and reconnect using the union nut. The difference will be 20-30 minutes vs. hours of labour.

In Conclusion
Stainless Steel Tank Tees are a great choice for areas where water quality causes corrosion on brass components or where it is unknown if dezincification of brass is a concern. For a slight premium in cost to the overall water system, you can have peace of mind with a S.S. tank tee and accessories which is highly corrosion resistant and is guaranteed to be free from dezincification concerns associated with brass.

BOSHART INDUSTRIES
25 Whaley Avenue, PO Box 310, Milverton
ON CANADA N0K 1M0
Tel: 800-561-3164
VISIT US ONLINE AT BOSHART.COM

For more information on installation, adjustment, repair & operation, visit Boshart Knowledge Base at
SUPPORT.BOSHART.COM

© 2026 Boshart Industries Inc. All Rights Reserved.

Tank Tee Selection Guide Chart

Material	Corrosion Resistance	Strength	Cost	Value	Product Line	Ease of Installation / Joint Sealing	Application Info.	Overall Rating out of 10
304 SS	Excellent	Very High	▲▼ High / Low	Excellent	Good product offering. Union and Non-Union types	Medium ◆Typically trouble free when the Sealing SS Guide is followed.	Suitable for all installations. A great choice when water quality is unknown. Or known to be aggressive to brass alloys.	**9.4**
Brass	■ Medium	■ Medium	Medium	Good		Easy ◘ Avoid Overtightening of FPT connections.	Use where water quality is known to be excellent and non-corrosive to brass.	**6.5**
PVC	Excellent	Low	Low	High	Limited product offering. No Union Tees available	Easy ▼ Avoid Overtightening and use of P.T.F.E. tape on FPT connections.	Suitable for all installations. A great choice when water quality is unknown. Or known to be aggressive to brass alloys.	**5.1**
Galvanized Malleable Iron	• Low	High	• Medium	High		Medium • Can be cumbersome when used with hydropneumatics tanks.	Use with Galvanized Steel Hydropneumatics tanks.	**4.0**

▲▼ Stainless Steel tees while having a higher upfront cost, are likely the most cost effective in the long term are likely to be the lower cost option, the robust design, superior corrosion resistance, high strength ensure longevity and are not likely to last a very long time. Worth every extra penny!

◆ See Knowledgebase article titled Making leak free stainless steel NPT Connections at Support.Boshart.com

■ Corrosion resistance and strength of brass will be negatively affected if water quality promotes dezincification corrosion. Dezincification will reduce the longevity of brass tank tees.

◘ It is best practice to use the external threads of the tees line connections to eliminate the risk of stress cracking the tee. See "What is the best practice for installing tank tees" at Support.Boshart.com

▼ See Knowledgebase article titled Making NPT Connections at Support.Boshart.com. It is best practice to use the external threads of the tees line connections to eliminate the risk of stress cracking the tee.

• If Galvanized tank tees are used on hydropneumatics tanks you will need to add a nipple which adds to the cost and difficulty of the installation. This also decreases corrosion resistance with exposed steel in a damp, humid environment.

For more information on tank tees and pressure tanks, please visit our Knowledgebase and search "Tank Tees" to find more articles on selection, installation and more.

BOSHART INDUSTRIES
25 Whaley Avenue, PO Box 310, Milverton
ON CANADA N0K 1M0
Tel: 800-561-3164
VISIT US ONLINE AT BOSHART.COM

For more information on installation, adjustment, repair & operation, visit Boshart Knowledge Base at
SUPPORT.BOSHART.COM

© 2026 Boshart Industries Inc. All Rights Reserved.

BII-07ST,2-07TK-1026(1717,81,81BF,81P100)V4.1

LONG PATTERN MALE UNION TANK TEES - FOR CENTER BOTTOM OUTLET PRESSURE TANKS

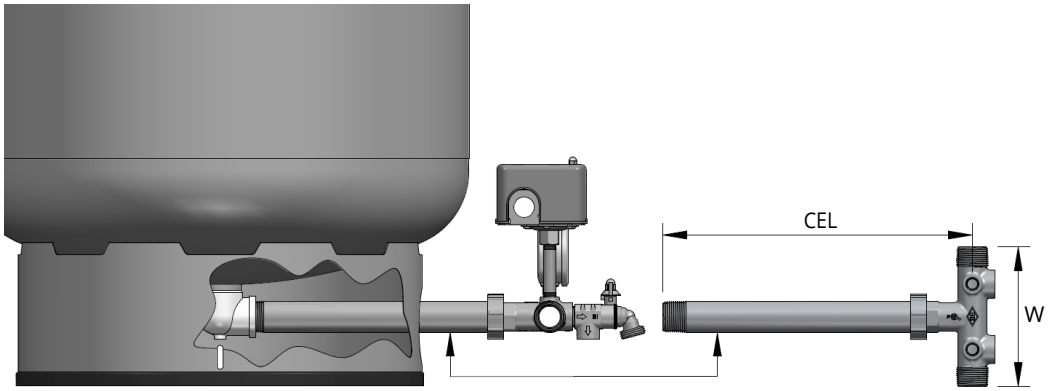

	DIMENSIONS									
	Part No.	Tank Connection	In-Line Connection	Accessory Ports	Drain Ports	O-Ring Part No.	CEL		W	
							in	mm	in	mm
07ST-25-2U	**304 Stainless Steel** - No-lead Certified to NSF/ANSI 372 (SS alloys do not contain any lead, 0.00% Pb)									
	07ST-8-2U	1" MPT	1" MPT x 3/4" FPT	(2) 1/4" FPT	(2) 1/2" FPT	07PT-OR-217 (AS568-217)	7.50	190.5	5.90	149.9
	07ST-25-2U						10.0	254.0	5.90	149.9
	07ST-14X1-2U						13.0	330.2	5.90	149.9
	07ST-13-2U	1-1/4" MPT	1-1/4" MPT x 1" FPT	(2) 1/4" FPT	(2) 3/4" FPT	07PT-OR-221 (AS568-221)	13.0	330.2	6.00	152.4
	07ST-16-2U						16.0	406.4	6.00	152.4
2-07TKO-13-2UNL	**C89550 NL Brass** - No-lead Certified to NSF/ANSI 372 (NL test criteria <0.25% Pb by weighted average)									
	2-07TKO-8-2UNL	1" MPT	1" MPT x 3/4" FPT	(2) 1/4" FPT	(2) 1/2" FPT	07PT-OR-215 (AS568-215)	7.50	190.5	5.47	138.9
	2-07TKO-25-1UNL				(1) 1/2" FPT		10.0	254.0	5.47	138.9
	2-07TKO-25-2UNL				(2) 1/2" FPT		10.0	254.0	5.47	138.9
	2-07TKO-14X1-2UNL				(2) 1/2" FPT		13.0	330.2	5.50	139.7
	2-07TKO-13-2UNL	1-1/4" MPT	1-1/4" MPT x 1" FPT	(2) 1/4" FPT	(2) 3/4" FPT	07PT-OR-218 (AS568-218)	13.0	330.2	5.95	151.1

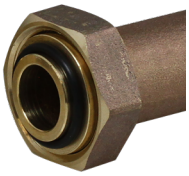

BOSHART INDUSTRIES
25 Whaley Avenue, PO Box 310, Milverton
ON CANADA N0K 1M0
Tel: 800-561-3164
VISIT US ONLINE AT BOSHART.COM

For more information on installation, adjustment, repair & operation, visit Boshart Knowledge Base at
SUPPORT.BOSHART.COM

© 2026 Boshart Industries Inc. All Rights Reserved.

BII-07ST,2-07TK-1026(1717,81,81BF,81P100)V4.1

LONG PATTERN MALE NON-UNION (SOLID) TANK TEES - FOR CENTER BOTTOM OUTLET PRESSURE TANKS

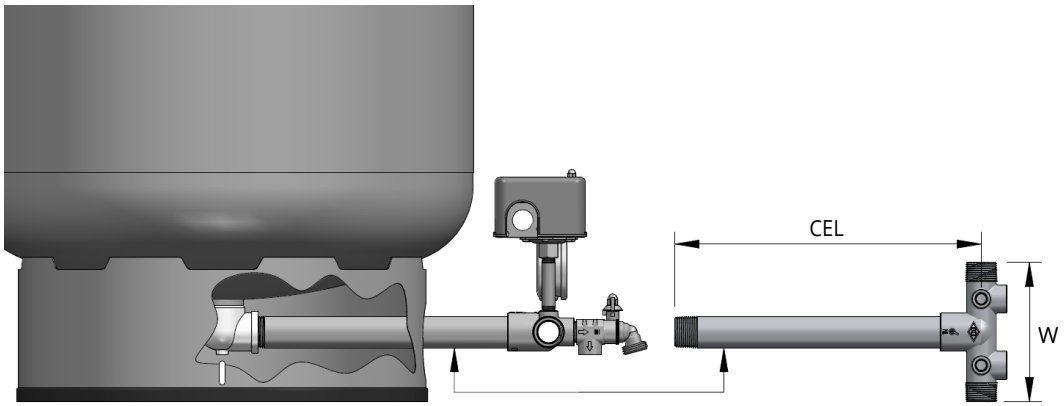

	DIMENSIONS								
	Part No.	Tank Connection	In-Line Connection	Accessory Ports	Drain Ports	CEL		W	
						in	mm	in	mm
07ST-8-2	**304 Stainless Steel** - No-lead Certified to NSF/ANSI 372 (SS alloys do not contain any lead, 0.00% Pb)								
	07ST-8-2	1" MPT	1" MPT x 3/4" FPT	(2) 1/4" FPT	(2) 1/2" FPT	7.75	196.9	5.80	147.3
	07ST-25-2					9.75	247.7	5.80	147.3
	07ST-14X1-2					12.75	323.9	5.85	148.6
	07ST-13-2	1-1/4" MPT	1-1/4" MPT x 1" FPT	(2) 1/4" FPT	(2) 3/4" FPT	12.88	327.2	5.95	151.1
	07ST-16-2					15.88	403.4	5.95	151.1
2-07TK-14X1-2NL	**C89550 NL Brass** - No-lead Certified to NSF/ANSI 372 (NL test criteria <0.25% Pb by weighted average)								
	2-07TK-25-1NL	1" MPT	1" MPT x 3/4" FPT	(2) 1/4" FPT	(1) 1/2" FPT	10.0	254.0	5.47	138.9
	2-07TK-25-2NL				(2) 1/2" FPT	10.0	254.0	5.47	138.9
	2-07TK-14X1-2NL					13.0	330.2	5.47	138.9
	2-07TK-13-2NL	1-1/4" MPT	1-1/4" MPT x 1" FPT	(2) 1/4" FPT	(2) 3/4" FPT	13.0	330.2	5.65	143.5
07PT-25-2	**PVC**								
	07PT-25-2	1"MPT	1" MPT x 3/4" Socket	(2) 1/4" FPT	(2) 1/2" FPT	11.0	279.4	5.60	142.2

BOSHART INDUSTRIES

25 Whaley Avenue, PO Box 310, Milverton
ON CANADA N0K 1M0
Tel: 800-561-3164

VISIT US ONLINE AT BOSHART.COM

For more information on installation, adjustment, repair & operation, visit Boshart Knowledge Base at
SUPPORT.BOSHART.COM

© 2026 Boshart Industries Inc. All Rights Reserved.

SHORT PATTERN MALE UNION TANK TEES - FOR FEMALE (FPT) SIDE OUTLET PRESSURE TANKS

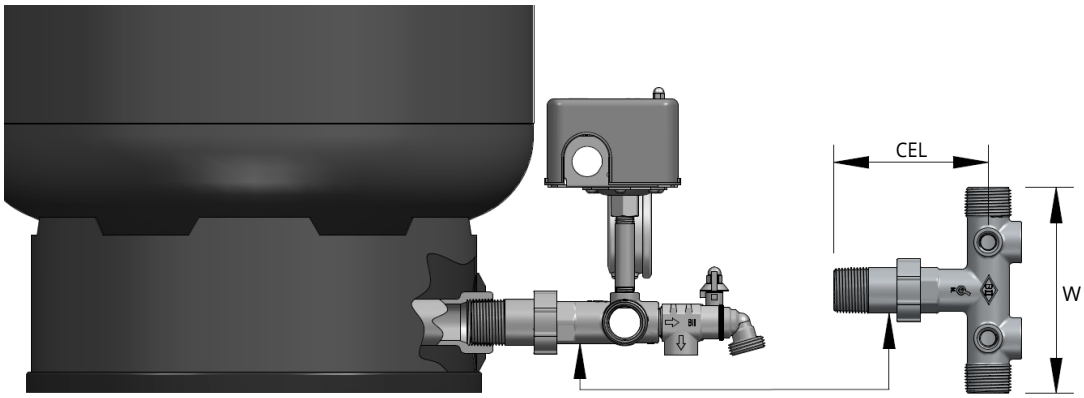

	DIMENSIONS									
	Part No.	Tank Connection	In-Line Connection	Accessory Ports	Drain Ports	O-Ring Part No.	CEL		W	
							in	mm	in	mm
07ST-13S-2U	**304 Stainless Steel** - No-lead Certified to NSF/ANSI 372 (SS alloys do not contain any lead, 0.00% Pb)									
	07ST-25S-2U	1" MPT	1" MPT x 3/4" FPT	(2) 1/4" FPT	(2) 1/2" FPT	07PT-OR-217 (AS568-217)	4.50	114.3	5.88	149.4
	07ST-13S-2U	1-1/4" MPT	1-1/4" MPT x 1" FPT	(2) 1/4" FPT	(2) 3/4" FPT	07PT-OR-221 (AS568-221)	4.50	114.3	6.00	152.4
2-07TKO-13S-2UNL	**C89550 NL Brass** - No-lead Certified to NSF/ANSI 372 (NL test criteria <0.25% Pb by weighted average)									
	2-07TKO-25S-2UNL	1" MPT	1" MPT x 3/4" FPT	(2) 1/4" FPT	(2) 1/2" FPT	07PT-OR-215 (AS568-215)	4.50	114.3	5.47	138.9
	2-07TKO-13S-2UNL	1-1/4" MPT	1-1/4" MPT x 1" FPT	(2) 1/4" FPT	(2) 3/4" FPT	07PT-OR-218 (AS568-218)	4.50	114.3	5.85	148.6

BOSHART INDUSTRIES
25 Whaley Avenue, PO Box 310, Milverton
ON CANADA N0K 1M0
Tel: 800-561-3164
VISIT US ONLINE AT BOSHART.COM

For more information on installation, adjustment, repair & operation, visit Boshart Knowledge Base at
SUPPORT.BOSHART.COM

© 2026 Boshart Industries Inc. All Rights Reserved.

BII-07ST,2-07TK-1026(1717,81,81BF,81P100)V4.1

SHORT PATTERN MALE NON-UNION (SOLID) TANK TEES - FOR FEMALE (FPT) SIDE OUTLET PRESSURE TANKS

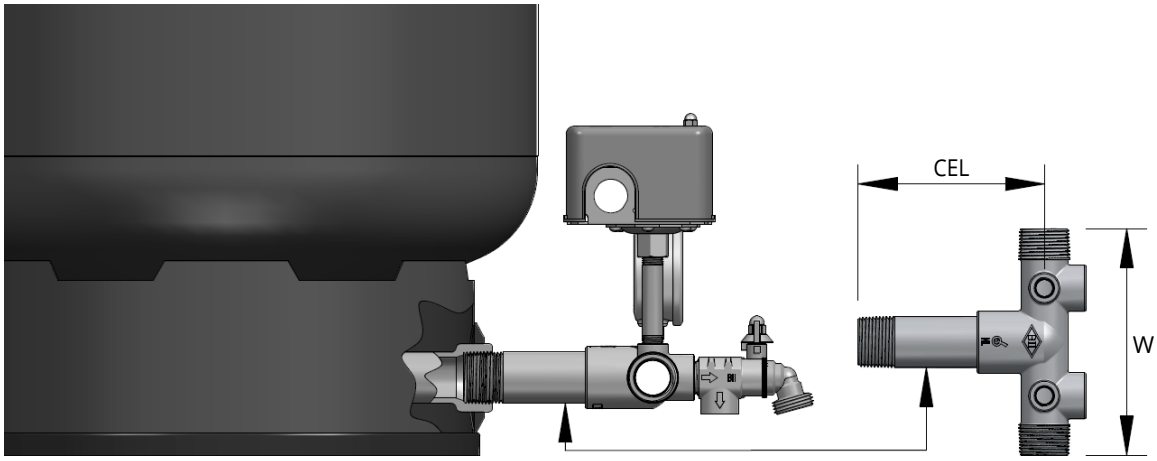

	DIMENSIONS								
	Part No.	Tank Connection	In-Line Connection	Accessory Ports	Drain Ports	CEL		W	
						in	mm	in	mm
07ST-25S-2	**304 Stainless Steel** - No-lead Certified to NSF/ANSI 372 (SS alloys do not contain any lead, 0.00% Pb)								
	07ST-25S-2	1" MPT	1" MPT x 3/4" FPT	(2) 1/4" FPT	(2) 1/2" FPT	4.75	120.7	5.80	147.3
	07ST-13S-2	1-1/4" MPT	1-1/4" MPT x 1" FPT	(2) 1/4" FPT	(2) 3/4" FPT	4.50	114.3	5.95	151.1
2-07TK-25S-2NL	**C89550 NL Brass** - No-lead Certified to NSF/ANSI 372 (NL test criteria <0.25% Pb by weighted average)								
	2-07TK-25S-2NL	1" MPT	1" MPT x 3/4" FPT	(2) 1/4" FPT	(2) 1/2" FPT	3.63	92.20	5.47	138.9
	2-07TK-54S-2NL	1-1/4" MPT				3.00	76.20	4.29	134.4
	2-07TK-13S-2NL	1-1/4" MPT	1-1/4" MPT x 1" FPT	(2) 1/4" FPT	(2) 3/4" FPT	3.38	85.85	5.69	144.5
07-IC125	**PVC**								
	07-IC125	1-1/4" MPT x 1" FPT	1" MPT x 3/4" FPT	(2) 1/4" FPT	(1) 3/4" FPT & (1) 1/2" FPT	3.63	92.20	4.85	123.2

BOSHART INDUSTRIES

25 Whaley Avenue, PO Box 310, Milverton
ON CANADA N0K 1M0
Tel: 800-561-3164

VISIT US ONLINE AT BOSHART.COM

For more information on installation, adjustment, repair & operation, visit Boshart Knowledge Base at
SUPPORT.BOSHART.COM

© 2026 Boshart Industries Inc. All Rights Reserved.

SHORT PATTERN FEMALE UNION TANK TEES - FOR MALE (MPT) SIDE OUTLET PRESSURE TANKS

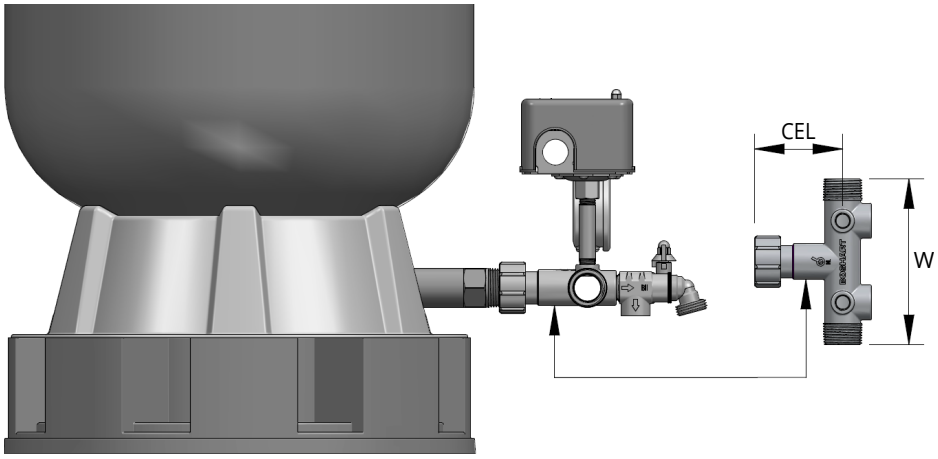

	DIMENSIONS									
	Part No.	Tank Connection	In-Line Connection	Accessory Ports	Drain Ports	O-Ring Part No.	CEL		W	
							in	mm	in	mm
	304 Stainless Steel - No-lead Certified to NSF/ANSI 372 (SS alloys do not contain any lead, 0.00% Pb)									
07ST-25SF-2U	07ST-25SF-2U	1" FPT	1" MPT x 3/4" FPT	(2) 1/4" FPT	(2) 1/2" FPT	07PT-OR-212 (AS568-212)	2.63	66.80	3.95	100.3
	07ST-13SF-2U	1-1/4" FPT	1-1/4" MPT x 1" FPT	(2) 1/4" FPT	(2) 3/4" FPT	07PT-OR-320 (AS568-320)	2.75	69.85	4.00	101.6
	C89550 NL Brass - No-lead Certified to NSF/ANSI 372 (NL test criteria <0.25% Pb by weighted average)									
2-07TK-13SF-2UNL	2-07TK-25SF-2UNL	1" FPT	1" MPT x 3/4" FPT	(2) 1/4" FPT	(2) 1/2" FPT	07PT-OR-212 (AS568-212)	3.00	76.20	4.05	102.9
	2-07TK-54SF-2UNL	1-1/4" FPT				07PT-OR-320 (AS568-320)	3.00	76.20	3.80	96.52
	2-07TK-13SF-2UNL	1-1/4" FPT	1-1/4" MPT x 1" FPT	(2) 1/4" FPT	(2) 3/4" FPT	07PT-OR-320 (AS568-320)	3.00	76.20	3.74	94.99

BOSHART INDUSTRIES

25 Whaley Avenue, PO Box 310, Milverton
ON CANADA N0K 1M0
Tel: 800-561-3164

VISIT US ONLINE AT BOSHART.COM

For more information on installation, adjustment, repair & operation, visit Boshart Knowledge Base at
SUPPORT.BOSHART.COM

© 2026 Boshart Industries Inc. All Rights Reserved.

SHORT PATTERN FEMALE NON-UNION (SOLID) TANK TEES - FOR MALE (MPT) SIDE OUTLET PRESSURE TANKS

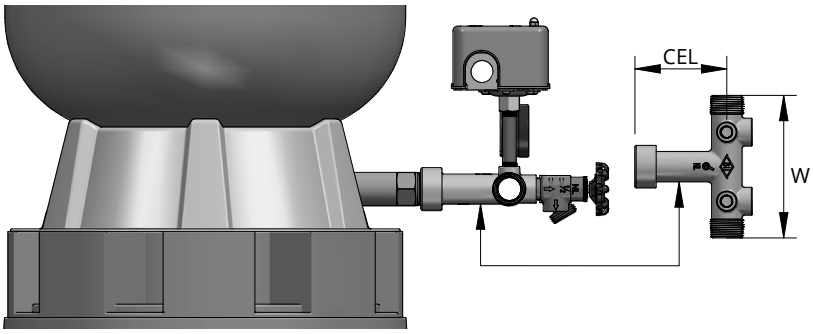

2-07TK-25SF-2NL

DIMENSIONS									
Part No.	Tank Connection	In-Line Connection	Accessory Ports	Drain Ports	CEL		W	
					in	mm	in	mm
C89550 NL Brass - No-lead Certified to NSF/ANSI 372 (NL test criteria <0.25% Pb by weighted average)								
2-07TK-25SF-2NL	1" FPT	1" MPT x 3/4" FPT	(2) 1/4" FPT	(2) 1/2" FPT	3.63	92.20	5.45	138.4
2-07TK-13SF-2NL	1-1/4" FPT	1-1/4" MPT x 1" FPT	(2) 1/4" FPT	(2) 3/4" FPT	3.63	92.20	4.65	118.1

SHORT PATTERN NON-UNION (SOLID) TANK TEES - FOR GALVANIZED HYDROPNEUMATIC SIDE OUTLET PRESSURE TANKS

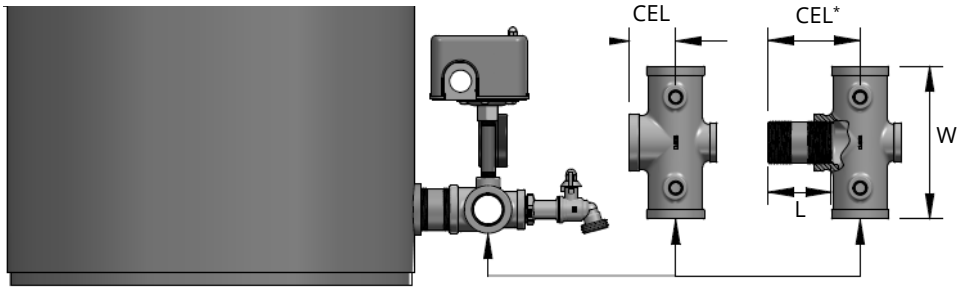

07HC125G

DIMENSIONS										
Part No.	Tank Connection	In-Line Connection	Accessory Ports	Drain Ports	CEL		CEL*		W	
					in	mm	in	mm	in	mm
Galvanized Malleable Iron										
07HC100G	1" FPT	1" FPT	(2) 1/4" FPT	(1) 3/4" FPT	1.50	38.10	3.34	84.84	5.75	146.1
07HC125G	1-1/4" FPT	1-1/4" FPT	(2) 1/4" FPT	(1) 3/4" FPT	1.81	45.97	3.63	92.20	6.00	152.4

*CEL for a nipple length (L) of 2.50"

BOSHART INDUSTRIES

25 Whaley Avenue, PO Box 310, Milverton
ON CANADA N0K 1M0
Tel: 800-561-3164
VISIT US ONLINE AT BOSHART.COM

For more information on installation, adjustment, repair & operation, visit Boshart Knowledge Base at
SUPPORT.BOSHART.COM

© 2026 Boshart Industries Inc. All Rights Reserved.

TANK TEE HEADS - FOR FABRICATING REQUIRED CEL ON SITE

This tank tee head can be assembled to any length of pipe nipple to provide the desired center end length (CEL) to work with various brands or diameters of center bottom connection or female side outlet connection pressure tanks. NOTE: This head is too short in CEL to work on a pressure tank with a male side outlet connection. Carrying this tank tee head on your service truck along with various SS nipple lengths will ensure you can plumb any tank that you find in the field.

NOTE: The FPT tank connection is purposely threaded deep to conceal the pipe nipple thread and to provide a clean, one piece appearance not having any threads exposed. There is no need for concern when you install the pipe nipple and it turns in much further than you normally get when making an NPT connection. This head is specially designed to ensure the nipple will not bottom out before the threads are tight.

The diagram below shows the CEL with various lengths of pipe nipple for the 1" and 1-1/4" tank tees.

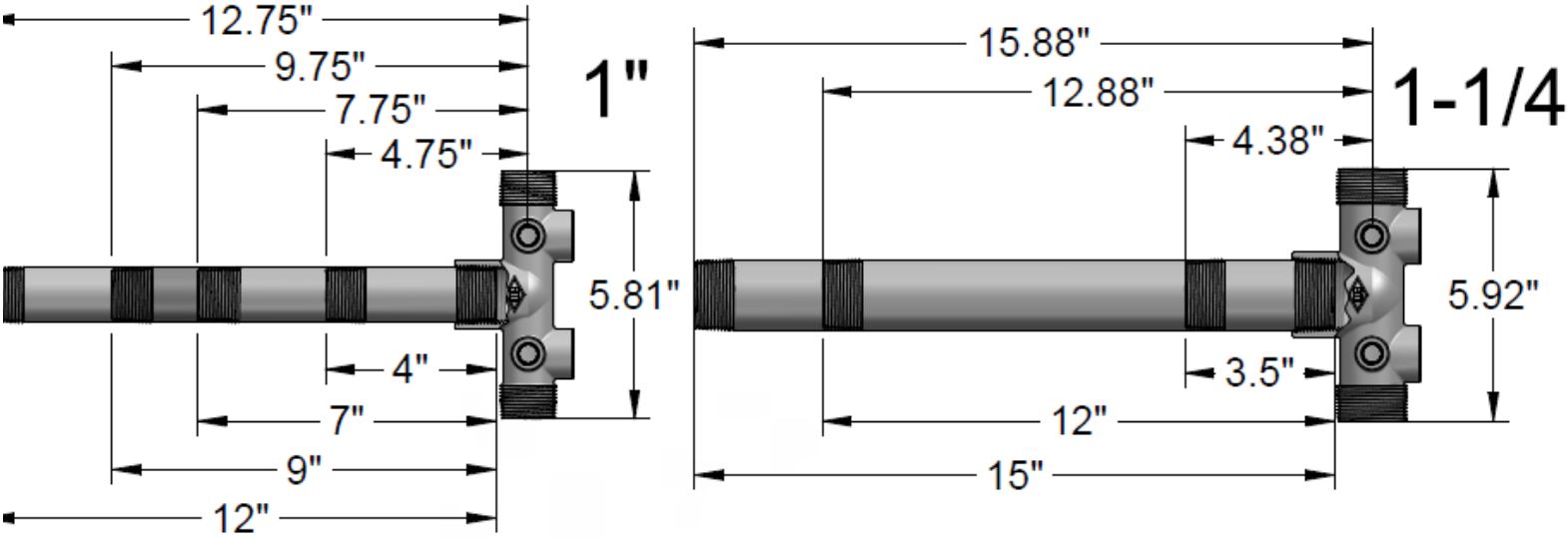

	DIMENSIONS						
	Part No.	Tank Connection	In-Line Connection	Accessory Ports	Drain Ports	W	
						in	mm
07ST-25SFH-2	**304 Stainless Steel** - No-lead Certified to NSF/ANSI 372 (SS alloys do not contain any lead, 0.00% Pb)						
	07ST-25SFH-2	1" FPT	1" MPT x 3/4" FPT	(2) 1/4" FPT	(2) 1/2" FPT	5.81	147.6
	07ST-13SFH-2	1-1/4" FPT	1-1/4" MPT x 1" FPT	(2) 1/4" FPT	(2) 3/4" FPT	5.92	150.4

BOSHART INDUSTRIES
25 Whaley Avenue, PO Box 310, Milverton
ON CANADA N0K 1M0
Tel: 800-561-3164
VISIT US ONLINE AT BOSHART.COM

For more information on installation, adjustment, repair & operation, visit Boshart Knowledge Base at
SUPPORT.BOSHART.COM

© 2026 Boshart Industries Inc. All Rights Reserved.

WELLMATE QUICK CONNECT TANK TEES - FOR WELLMATE TANKS ONLY

These tank tees are specially designed for the Wellmate Quick Connect tank series. They have alignment tabs that interlock with the tank connection to keep the tee in perfect position. The leg length allows for the replacement of a pressure switch without hitting the tank, eliminating the need for the tee to be disassembeled from the tank.

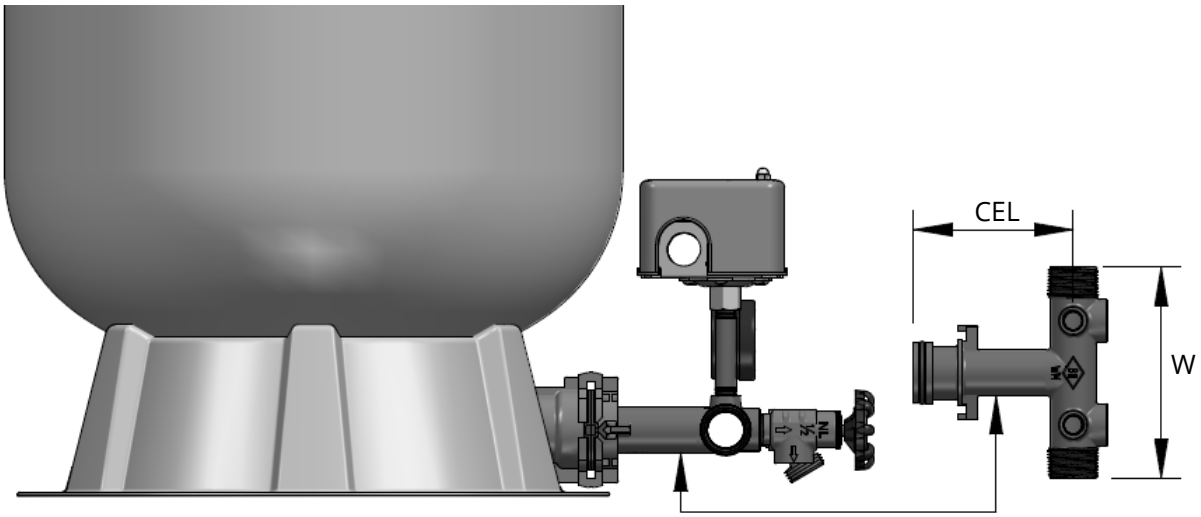

	DIMENSIONS									
	Part No.	Tank Connection	In-Line Connection	Accessory Ports	Drain Ports	O-Ring	CEL		W	
							in	mm	in	mm
07TK-25S-2-WMNL	**C89550 NL Brass** - No-lead Certified to NSF/ANSI 372 (NL test criteria <0.25% Pb by weighted average)									
	07TK-25S-2-WMNL	Male QC	1" MPT x 3/4" FPT	(2) 1/4" FPT	(2) 1/2" FPT	07PT-OR-220 (AS568-220)	4.13	104.9	5.05	128.3
	07TK-13S-2-WMNL		1-1/4" MPT x 1" FPT		(2) 3/4" FPT		6.00	152.4	5.95	151.1

BOSHART INDUSTRIES
25 Whaley Avenue, PO Box 310, Milverton
ON CANADA N0K 1M0
Tel: 800-561-3164
VISIT US ONLINE AT BOSHART.COM

For more information on installation, adjustment, repair & operation, visit Boshart Knowledge Base at
SUPPORT.BOSHART.COM

© 2026 Boshart Industries Inc. All Rights Reserved.